

LIDAR INTEGRATION FOR OBJECT DETECTION, CLASSIFICATION AND TRACKING

Quanergy Overview

- Quanergy is a world leading provider of LiDAR (Light Detection and Ranging) sensors and smart sensing solutions for real time 3D object detection, classification and tracking
- Headquartered in Silicon Valley with global presence in Detroit, Washington DC, Canada, China, Japan, UAE, Germany and United Kingdom

CES INNOVATION AWARDS 2017 BEST OF INNOVATION

FAST COMPANY 2016 MOST INNOVATIVE COMPANIES

FROST & SULLIVAN 2015 BEST PRACTICES AWARD GLOBAL LIGHT DETECTION AND RANGING (LiDAR) ENTREPRENEURIAL COMPANY OF THE YEAR AWARD

Gartner 2015 CoolVendor

CIO Review 20 MOST PROMISING ROBOTICS SOLUTION PROVIDERS 2015

THE WALL STREET JOURNAL. WSJ

FORTUNE

TechCrunch

MIT Technology Review

IHS

<re/code>

Forbes

IEEE SPECTRUM

PBS

Complimentary Sensing With LiDAR

	LiDAR	Video	Radar
Sensing Dimensions	3D	2D	1D
Accuracy	+++	+	–
3D Shape	+++	–	–
Height & Width	+++	+	–
Field of View	+++	+	++
Range	+++	–	+++
Range Rate	++	–	+++
Object Recognition @ Long Range	+++	–	–
Rain, Snow, Dust	++	–	+++
Fog	+	–	+++
Night time	+++	–	+++
Read Signs & See Color	+	+++	–

LiDAR is the most accurate perception sensor

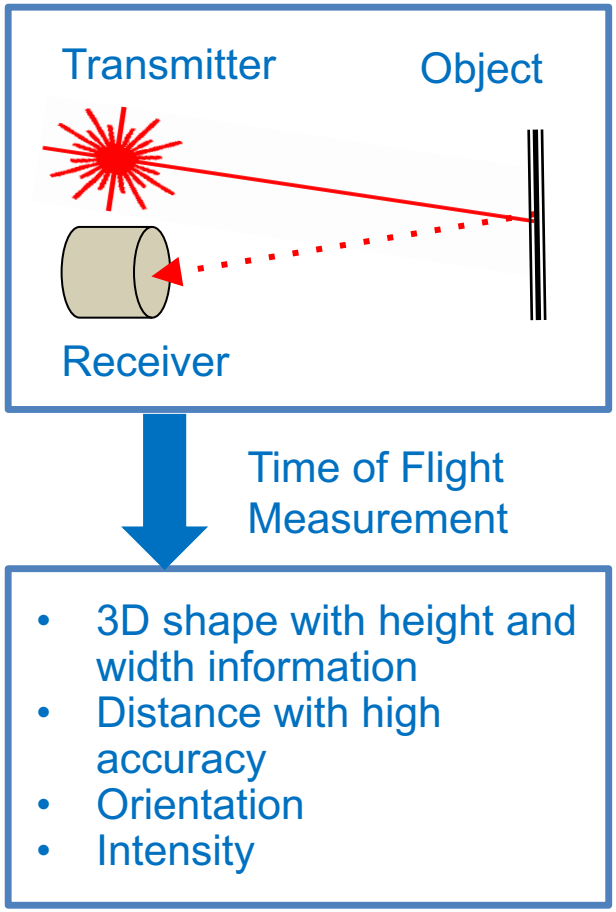

Object Detection, Classification and Tracking With High Accuracy

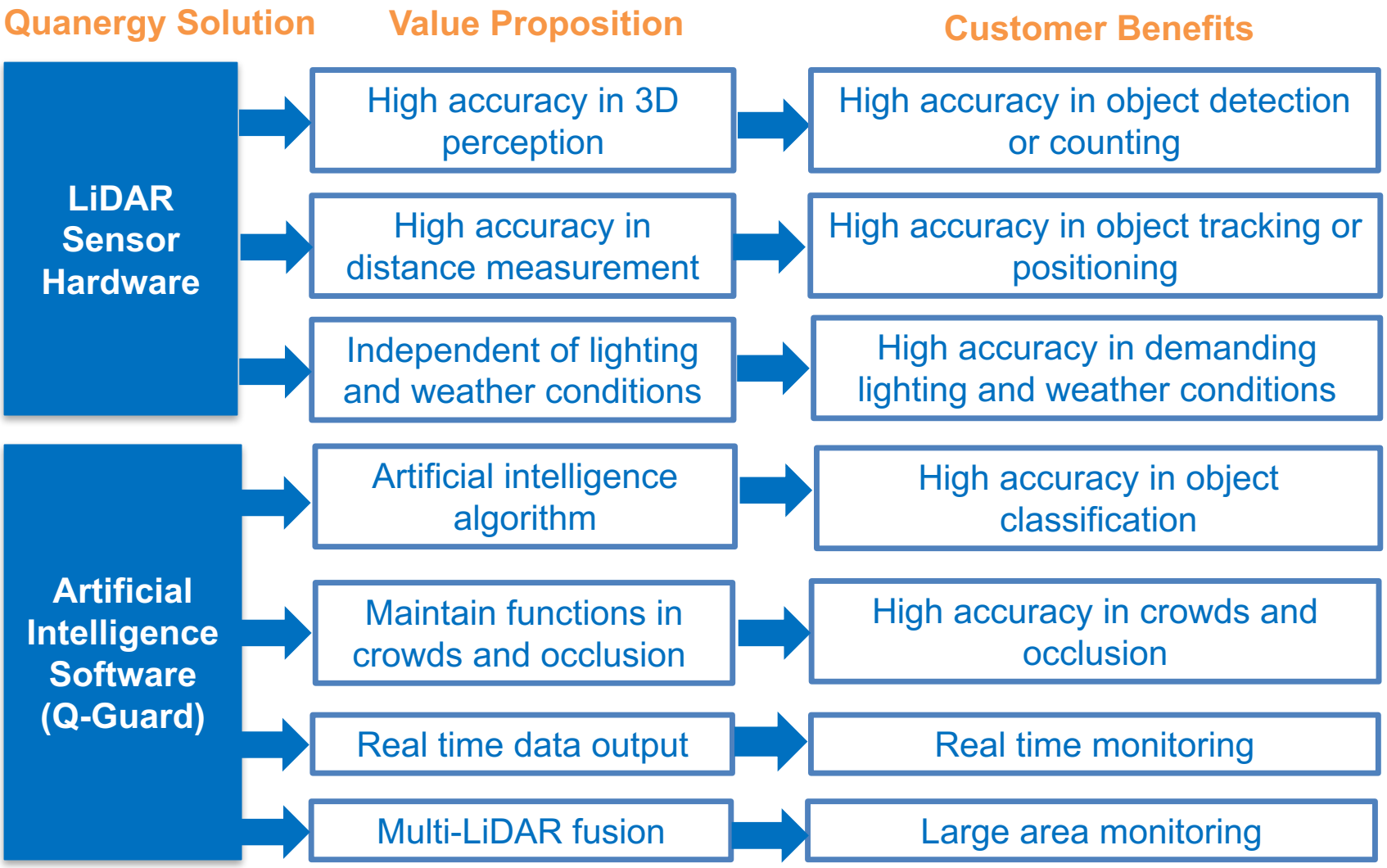

People Tracking with Automated PTZ Camera Control





QPU

Data Collection
Object Detection
Classification
Tracking

Object List

UID	OBJ1	OBJ2	OBJ3
Class	Moving	Stationary	Moving
Rotation	Theta	Theta	Theta
Position	Vector3	Vector3	Vector3
Scale	Vector3	Vector3	Vector3
Velocity	Vector3	Vector3	Vector3

ETHERNET



User Datacenter

- Read Object List
- Perform Analytics
- Generate Reports

- PTZ CAMERA CONTROL
- SOUND ALARMS





Key Applications For People Detection, Classification and Tracking

People Detection and Classification

- People counting with high accuracy in a large area in real time
- Intrusion detection with substantially less false alarms (sensor to control PTZ camera in a large area in real time)

People Tracking

- Queue management with high accuracy in real time
- People flow monitoring in a large area in real time
- People tracking in a large area (LiDAR data may be fused with camera for authentication)

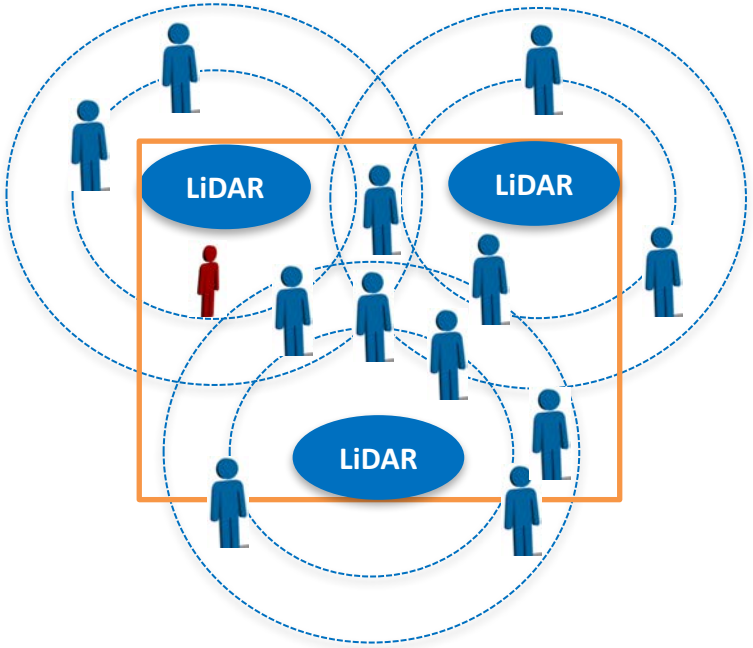

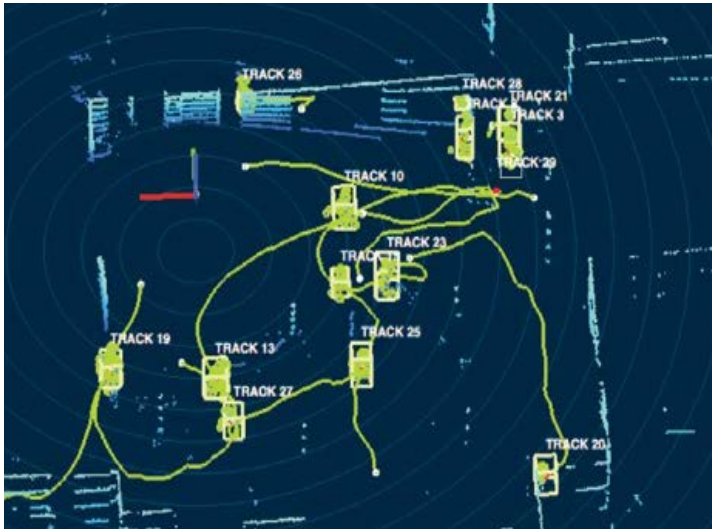

https://vimeo.com/198920551/6ee436fb21

Thank You



Quanergy Sites:
Silicon Valley (HQ)
Detroit
Ottawa
Stuttgart
Dubai
Shanghai
Tokyo

Drew Madhu
(813) 453-6538
drew.madhu@quanergy.com
www.quanergy.com
@quanergy