User Manual

Inductive Loop Vehicle Detector

ClairLup-V8F

Version: 2.0

TraffiClair Technology Co., Ltd.

Content

1. Overview....4
2. Key Features....5
3. Interfaces and Specifications....6
4. Panel and Interface Description....7
LED Indicator Explanation....7
Description of DIP Switch....8
Multifunction Interface....9
Reset Button....9
Input Interface:....10
Output Interface:....10
IO inputs, RS485, and power input interfaces....11
The grounding terminal....11
5. Main function description....12
6. The configuration management client....13
6.1 Parameter setting and querying....13
6.2 Data display....15
6.3 Traffic Flow Statistics....16
6.4 Wave display....16
7. Wiring Instruction....18
7.1 The rear panel wiring instruction....18
The INPUT interface....18
The OUTPUT interface....18
IN Interface (Input functionality no longer supported in the new version):....19
RS485 interface....19
DC-IN interface....20

Protective ground 20
7.2 Wiring instruction 20
8. Communication Protocol 22
8.1 Serial port definition 22
8.2 Detailed Explanation of the Communication Protocol 22
8.3 Appendix: CRC Checksum Algorithm 37

1. Overview

The CLAIRLUP-V8F inductive loop vehicle detector adopts a system architecture consisting of a 32-bit ARM core processor and an FPGA. The core detection algorithm employs pure hardware technology. The flexibility of ARM combined with the powerful processing capability of FPGA enables the system to have fast response, high accuracy, strong anti-interference capability, and flexible expansion. It can be widely used in systems such as traffic flow monitoring, electronic police, and security checkpoints on urban roads, highways, bridges, tunnels, and other sections.



Figure1: ClairLup-V8F inductive loop detector

2. Key Features

- Single device supports the connection of 8 channels of loops, enabling traffic flow statistics for 4 lanes.
- Innovative polling + parallel detection mode, balancing efficiency and anti-interference capability.
- Response time of less than 3ms ensures real-time detection and measurement accuracy, fully supporting the use of traffic flow monitoring, electronic police, and security checkpoint systems.
- Fast intelligent background frequency updates, tracking environmental parameter changes in real-time.
- Supports advanced intelligent deadlock prevention algorithms, ensuring long-term maintenance-free operation.
- Supports real-time display of passing vehicle waveforms, enabling detailed observation of all aspects of vehicle passage through the loop, greatly facilitating on-site problem analysis and localization, making installation and environmental issues clear at a glance.
- Real-time loop fault detection, automatically restoring normal operation after fault elimination.
- Supports loop open circuit and short circuit detection, with fault indication lights to distinguish between loop fault types.
- The core detection unit adopts pure hardware detection technology, ensuring stable and reliable operation.

3. Interfaces and Specifications

- 8 loop interfaces, supporting protective measures such as air discharge, TVS, and transformer isolation.
- 1 RS485 serial port, baud rate (9600, 38400, 57600, 115200) can be set via DIP switches.
- Expandable 10/100M Ethernet port.
- A custom multifunctional interface, supporting device debugging, cascading, and other functions.
- 8 I/O output interfaces, configurable in normally open/normally closed modes.
- Supports 8 levels of sensitivity, adjustable via DIP switches.
- Loop inductance range: 20~2000uH.
- 12/24VDC input power supply, with reverse connection protection.
- Rated power <5W.
- Operating temperature: -40˚C to +70˚C.
- Operating humidity: 10% to 95% (non-condensing).
- Structural dimensions: 192mm (W) * 148mm (D) * 28mm (H).

4. Panel and Interface Description

LED Indicator Explanation

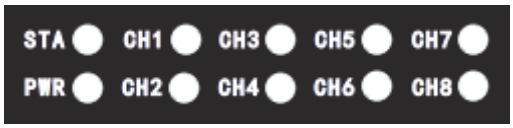

LED Indicator Colors and Functions

LED	Color	Function Description
PWR	Green	Power supply indicator
STA	Red/Green	● Red rapid flashing (0.5 seconds on, 0.5 seconds off): Self-check failure. ● Red flashing (1 second on, 1 second off): Indicates cascade connection failure when used as a slave device alone or in cascade. ● Green flashing: Indicates normal operation of the system. ● Alternating red and green flashing: Indicates that the vehicle detector has entered waveform output mode.
CH1-CH8	Red/Green	Solid Red: Indicates an open circuit or disconnected loop. Red Flash: Indicates a short circuit or the loop's inductance value being too small. Solid Green: Indicates the presence of a vehicle. Off: Indicates no vehicle detected.

Description of DIP Switch

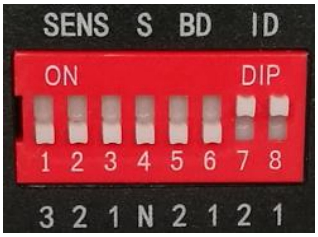

Definition and Function of Each DIP Switch Position

Dip switch	Functions
SENS (3~1) refers to the silk screen labeling on the chassis, not on the dip switch.	Sensitivity is set by DIP switches, with a total of 3 switch positions. "3" represents the highest bit, and "1" represents the lowest bit. The value range is from 000 to 111, where 000 indicates the highest sensitivity and 111 indicates the lowest sensitivity. The same sensitivity setting applies to all 8 channels.
S/N	Select data output channel, S: RS485 serial port; N: 10/100M Ethernet port, this dip switch is invalid when the Ethernet port is not configured.
BD (2-1)	Set RS485 Baud Rate: - Two dip switches are used, where 2 represents the high bit and 1 represents the low bit. - Options: - 00: 9600 - 01: 38400 - 10: 57600 (Recommended normal working baud rate) - 11: 115200 (Recommended baud rate for waveform output)
ID (2-1)	Device ID, consisting of two dip switches, with 2 as the high bit and 1 as the low bit.

	00: Master device Other values: Slave device

Note 1: Setting to "ON" corresponds to the value "0", while setting to "OFF" corresponds to the value "1".

Note 2: When devices are cascaded, one of them should be configured as the master device, while all others should be set as slave devices (IDs other than "00").

Note 3: All dip switch settings take effect immediately without the need to reset the detector.

Multifunction Interface

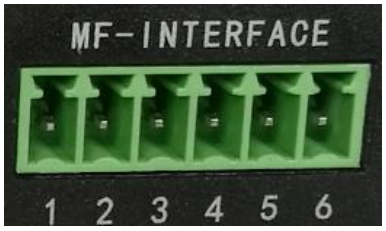

This interface supports device debugging and cascading functions. When cascading is used, simply connect the 4th and 5th terminals of all cascaded devices correspondingly. Other terminals do not need to be connected. Cascading supports no fewer than 4 devices.

Reset Button



The reset button is used to reset the detector, but under normal circumstances, users do not need to reset the device.

Input Interface:

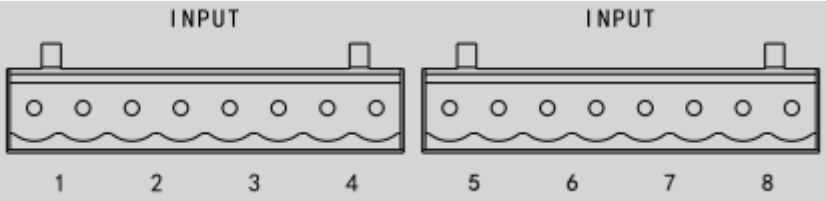

The 1~8 terminal connectors are used to connect 8 detection loops. 1/2, 3/4, 5/6, and 7/8 correspond to four lanes respectively. In actual wiring, as shown in the diagram below, follow the direction of travel. CH1 connects to the front loop, CH2 connects to the rear loop, and so on.

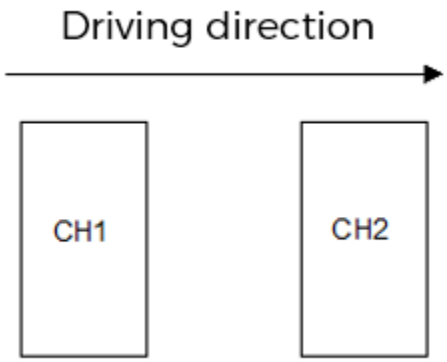

Output Interface:

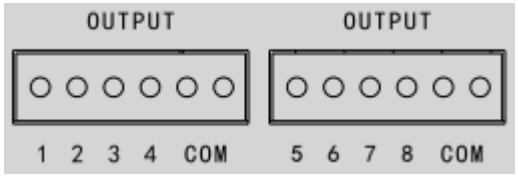

The 1~8 terminal connectors are 8 output interfaces. The output mode can be configured as normally open or normally closed, with the default being normally open. COM is the common terminal (all COM terminals are connected internally within the device). The 8 output I/Os correspond to the presence mode output of the 8 detection channels respectively.

IO inputs, RS485, and power input interfaces

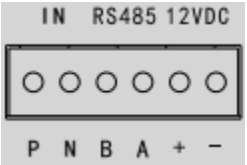

IO input interface (no longer supported in the new version): Supports 1 channel of switch quantity input, used to detect the on/off status of switch quantity and upload real-time information to the upper computer;

RS485 interface: Communicates with the upper computer, outputting detection data and configuring the working parameters of the device;

Power input interface: Supports 12V (or 24V) DC power input, equipped with reverse connection protection function, the whole machine power consumption is less than 4W.

The grounding terminal



The inductive loop is highly susceptible to lightning strikes. During normal operation, it is essential that the grounding terminal of the vehicle detector is reliably connected to the cabinet ground. When multiple devices are cascaded, each device must be individually grounded.

5. Main function description

- Real-time Vehicle Detection: Ensures accurate camera capture positions without deviation or missed vehicles, with a capture rate exceeding 99.9%.
- High Precision Speed Measurement and Overspeed Detection: Speed measurement range from 0 to 255 km/h, with flexible setting of overspeed threshold.
- Wrong-Way Detection: Detects vehicles passing through the loop in the wrong direction and outputs real-time wrong-way alert information, suitable for violation capture by traffic enforcement devices.
- Traffic Flow Statistics: Single device supports traffic flow detection for 2 lanes, including:
  1. Number of vehicles per lane, range: 0 to 65535 vehicles
  2. Lane occupancy rate, range: 0% to 100%
  3. Average vehicle speed, range: 0 to 255 km/h
  4. Average vehicle spacing, range: 0 to 65535 meters
  5. Average headway time, range: 0 to 65535 seconds
  6. Following percentage, range: 0% to 100%

Traffic flow statistics period can be flexibly set within 1 to 60 minutes. Once the traffic flow statistics period is set, the device will automatically output traffic data (aligned by minute) based on the onboard RTC time. The device can automatically resume working status after power failure, reboot, etc.

6. The configuration management client

6.1 Parameter setting and querying



- Synchronize System Time: Synchronizes the time from the PC to the vehicle detector.
- Get Device Time: Retrieves the current real-time time from the device.
- Query Device Version: Obtains the current version information of the device.
- Enter Parameter Setting: This command is executed before parameter setting. Upon successful execution, the vehicle detector will enter the parameter setting mode (indicated by alternating flashing of the STA indicator light in red and green). During this time, it will not output other detection data (heartbeat data will continue to be output) to prevent RS485 bus conflicts during parameter setting.
- Exit Parameter Setting: After completing parameter setting, execute this command to exit parameter setting mode.

- Loop Basic Parameter Setting: Includes parameters such as direction/lane, loop length, loop center distance, and overspeed threshold. The measurement dimensions are as shown in the diagram below:

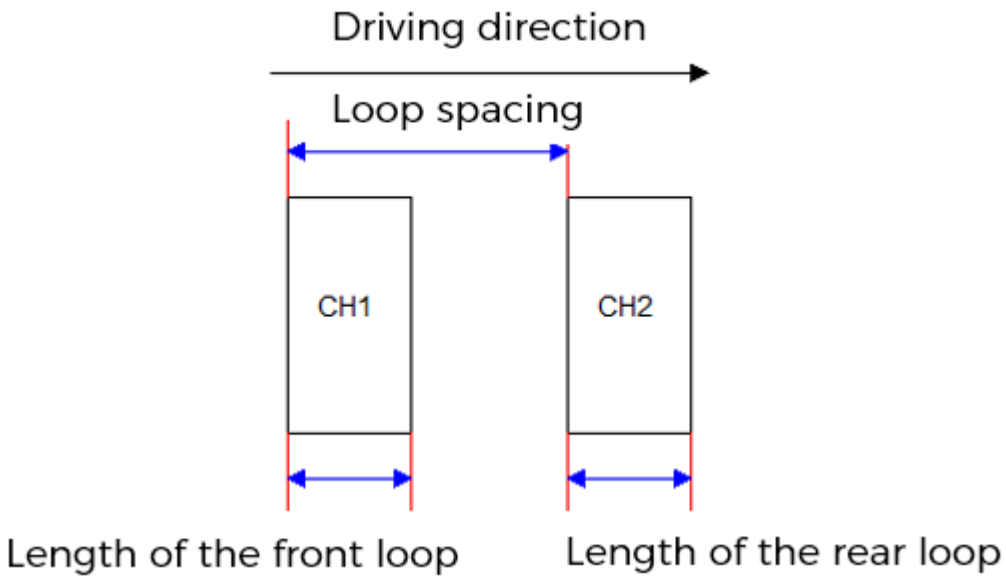

Note: All length units are in decimeters. When the lengths of the front and rear loops are consistent or similar, the loop center distance can be measured according to the diagram provided.

- Enable/Disable Traffic Flow Statistics Function and Set Traffic Flow Statistics Period: The statistics period can be set to any value between 1 and 60 minutes.
- IO Output Type: The new version only supports switch quantity output mode.
- IO Output Mode: The default mode is normally open, where the output is conducted when a vehicle is detected and disconnected otherwise.
- Enable/Disable Overspeed Detection.
- Following Vehicle Identification Time Setting: The time range is from 1 to 255 seconds. If the headway time between the current and preceding vehicles is less than the set value, it is identified as a following vehicle event.

- Set Device ID: When multiple devices are present in the system, they can be distinguished by their IDs. This function is optional if not needed.
- Get Loop Frequency: Obtain the current operating frequency of the loop.

Note: Parameters are automatically saved upon successful setting and will not be lost even after power loss.

6.2 Data display



The data display interface records in real-time all the detection data packets outputted by the vehicle detector. The date and time are based on the PC-side time, not the data outputted by the vehicle detector. This feature enables analysis of the time intervals between data packets.

6.3 Traffic Flow Statistics



The traffic flow statistics interface records all traffic data packets and displays the detection data for each time period.

6.4 Wave display

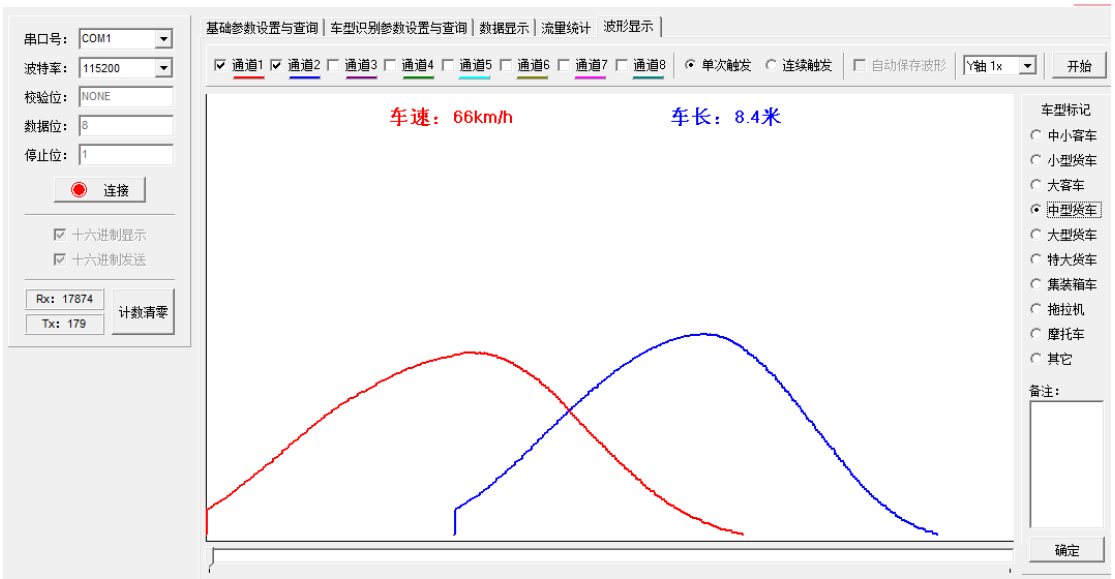

The waveform display interface records real-time changes in detection data as vehicles pass through the respective loops. It supports both single-trigger and continuous-trigger functionalities.

- Single Trigger:

Single-trigger mode records a complete set of waveform data for a group of loop channels (1/2, 3/4, 5/6, 7/8). Clicking "Start" initiates the recording, and it automatically stops after capturing a complete set of data for a vehicle passage. Single-trigger mode is primarily used for precise vehicle type marking. After capturing the waveform data, users can manually mark the vehicle type category or record detailed vehicle type information as a note. Clicking "Confirm" automatically saves the data for subsequent analysis.

- Continuous Trigger:

Continuous-trigger mode can simultaneously record real-time waveforms for all 8 channels. Users can freely select the channels to record. Additionally, if automatic waveform saving is enabled, the system will automatically save data every 30,000 sets. Continuous-trigger mode allows continuous observation of vehicle waveforms as they pass through the loops, greatly facilitating on-site problem analysis and troubleshooting. It also provides clear visibility into the operational status of each channel of the vehicle detector.

7. Wiring Instruction

7.1 The rear panel wiring instruction

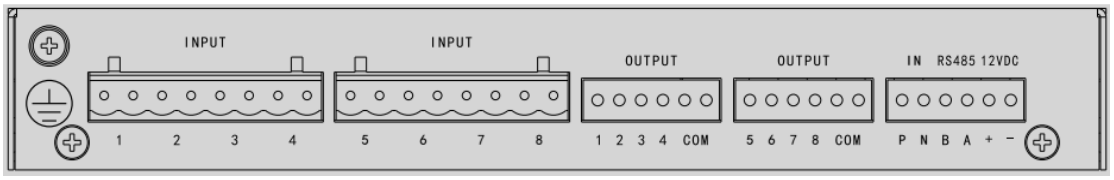

Figure3: Device rear panel

The INPUT interface

The input interfaces 1/2/3/4/5/6/7/8 are connected to 8 detection loops. The loop turns range from 4 to 5 turns. When the loop is installed on a reinforced mesh road surface, it is recommended to have 6 to 8 turns. The loop lead wires must be twisted in pairs, with at least 20 twists per meter.

The OUTPUT interface

The presence output interface includes 6 terminal positions. Terminals 1/2/3/4 correspond to the presence outputs of 4 loops respectively, while COM serves as the common terminal, with the two terminal connectors internally connected within the device.

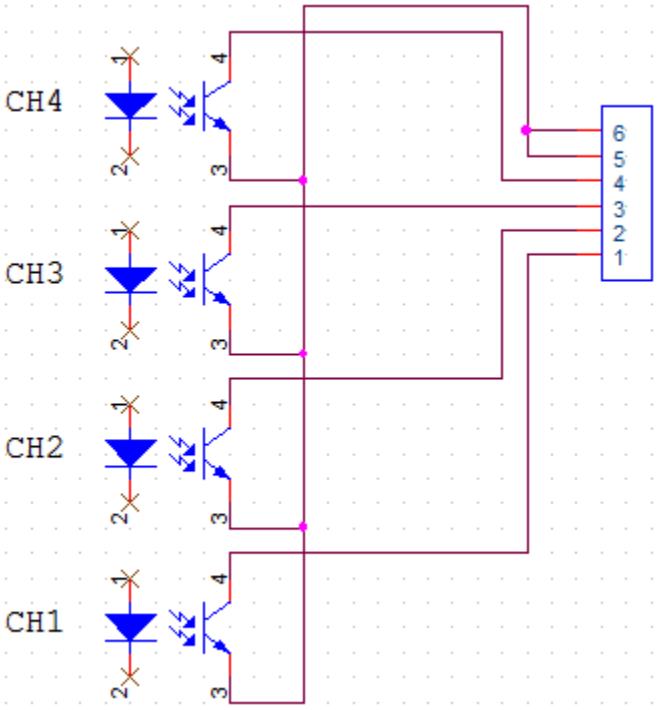

Figure 4: Schematic diagram of detector output interface (optocoupler output)

IN Interface (Input functionality no longer supported in the new version):

The detector provides one I/O input interface, supporting switch quantity or voltage level input (refer to the 5V voltage level standard). If the docking signal has polarity, please connect correspondingly (P for positive, N for negative).

RS485 interface

The RS485 interface is used to configure and query the working parameters of the detector, as well as to output detection data according to the protocol. When wiring, it is recommended to use shielded twisted pair cable to connect to the opposite device. Connect terminal A to terminal A and terminal B to terminal B on the opposite device. The shielding

layer of the cable should be connected to the equipment chassis or protective ground. When using the RS485 interface, it is important to ensure that the baud rates of both devices at each end of the interface are set to the same value.

DC-IN interface

The DC-IN is the direct current power input interface, operating at voltages of 12VDC or 24VDC. The positive and negative terminals of the power source can be connected arbitrarily.

Protective ground

When wiring, simply connect the protective ground to the protective ground of the equipment cabinet using a wire.

7.2 Wiring instruction

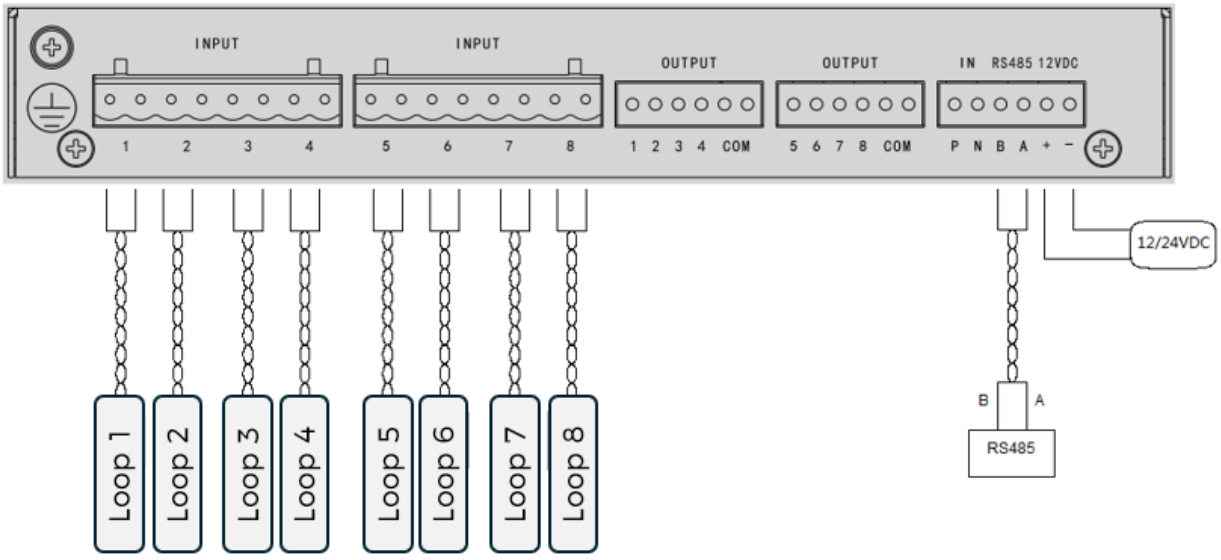

Figure 5: Schematic diagram of loop, RS485, and power supply wiring

8. Communication Protocol

8.1 Serial port definition

This device uses the RS485 custom communication protocol, and the serial port settings and communication format are as follows.

Serial Port Configuration

Baud Rates: 9600, 38400, 57600, 115200 (selected via dip switches)

Data Bits: 8

Parity: None

Stop Bits: 1

8.2 Detailed Explanation of the Communication Protocol

1. When a vehicle enters the loop, the vehicle detector serial port outputs information in the following format:

Number of Bytes	Meaning of Bytes	Description
1	Frame Start	0x7E
1	Device ID	Configurable, range: 0 to 150, default: 0
1	Board ID	0-3
2	Message Body Length	The order is <High Byte 0x00, Low Byte 0x07>.
1	Command Byte	0xFA
1	Direction and Lane Number	Bit[3~0]: Lane number, 1~8 Bit[7~4]: Direction number, 1~4
1	Vehicle ID and Direction	Bit 0 represents the vehicle's direction of travel, where 0 indicates forward and 1

		indicates reverse. Bits 4 to 7 represent the vehicle ID, with IDs ranging from 0 to 15.
4	Vehicle Entry Time Information	The vehicle entry time information is composed of 4 bytes, forming a 32-bit time data. The high byte comes first, followed by the low byte, and the time scale is in milliseconds.
2	CRC Checksum	Checksum, calculated over the range from (Device ID) to (Vehicle ID and Direction).
1	Frame End	End of Frame Character (0x7F)

Note: The time information refers to the system's running time, ranging from 0 to 0xFFFFFFFF cyclically, with a time unit of milliseconds. This time information can be used to calculate the precise time relationship between vehicles entering and exiting each loop channel, enabling functions such as speed measurement and time occupancy calculation. Note that the system time will roll over approximately every 50 days. To prevent calculation errors during time rollover, appropriate software handling is required.

2. When a vehicle leaves the loop, the vehicle detector serial port outputs information in the following format:

Number of Bytes	Meaning of Bytes	Description
1	Frame Start	0x7E
1	Device ID	Configurable, range: 0 to 150, default: 0
1	Board ID	0-3
2	Message Body Length	The order is <High Byte 0x00, Low Byte 0x07>.

1	Command Byte	0xFB
1	Direction and Lane Number	Bit[3~0]: Lane number, 1~8 Bit[7~4]: Direction number, 1~4
1	Vehicle ID and Direction	Bit 0 represents the vehicle's direction of travel, where 0 indicates forward and 1 indicates reverse. Bits 4 to 7 represent the vehicle ID, with IDs ranging from 0 to 15.
4	Vehicle Entry Time Information	The vehicle entry time information is composed of 4 bytes, forming a 32-bit time data. The high byte comes first, followed by the low byte, and the time scale is in milliseconds.
2	CRC Checksum	Checksum, calculated over the range from (Device ID) to (Vehicle ID and Direction).
1	Frame End	End of Frame Character (0x7F)

3. When a vehicle enters the rear loop, the format of the vehicle detector's serial port output information is as follows:

Number of Bytes	Meaning of Bytes	Description
1	Frame Start	0x7E
1	Device ID	Configurable, range: 0 to 150, default: 0
1	Board ID	0-3
2	Message Body Length	The order is <High Byte 0x00, Low Byte 0x07>.
1	Command Byte	0xFC
1	Direction and Lane Number	Bit[3~0]: Lane number, 1~8 Bit[7~4]: Direction number, 1~4
1	Vehicle ID and	Bit 0 represents the vehicle's

	Direction	direction of travel, where 0 indicates forward and 1 indicates reverse. Bits 4 to 7 represent the vehicle ID, with IDs ranging from 0 to 15.
4	Vehicle Entry Time Information	The vehicle entry time information is composed of 4 bytes, forming a 32-bit time data. The high byte comes first, followed by the low byte, and the time scale is in milliseconds.
2	CRC Checksum	Checksum, calculated over the range from (Device ID) to (Vehicle ID and Direction).
1	Frame End	End of Frame Character (0x7F)

4. When a vehicle exits the rear loop, the format of the vehicle detector's serial port output information is as follows:

Number of Bytes	Meaning of Bytes	Description
1	Frame Start	0x7E
1	Device ID	Configurable, range: 0 to 150, default: 0
1	Board ID	0-3
2	Message Body Length	The order is <High Byte 0x00, Low Byte 0x07>.
1	Command Byte	0xFD
1	Direction and Lane Number	Bit[3~0]: Lane number, 1~8 Bit[7~4]: Direction number, 1~4
1	Vehicle ID and Direction	Bit 0 represents the vehicle's direction of travel, where 0 indicates forward and 1 indicates reverse.

		Bits 4 to 7 represent the vehicle ID, with IDs ranging from 0 to 15.
4	Vehicle Entry Time Information	The vehicle entry time information is composed of 4 bytes, forming a 32-bit time data. The high byte comes first, followed by the low byte, and the time scale is in milliseconds.
2	CRC Checksum	Checksum, calculated over the range from (Device ID) to (Vehicle ID and Direction).
1	Frame End	End of Frame Character (0x7F)

5. When overspeed detection (enabled) or wrong-way driving is detected, the format of the vehicle detector's serial port output information is as follows:

Number of Bytes	Meaning of Bytes	Description
1	Frame Start	0x7E
1	Device ID	Configurable, range: 0 to 150, default: 0
1	Board ID	0-3
2	Message Body Length	The order is <High Byte 0x00, Low Byte 0x03>.
1	Command Byte	0xF9 (Sent only when overspeed or wrong-way driving is detected)
1	Direction and Lane Number	Bit[3~0]: Lane number, 1~8 Bit[7~4]: Direction number, 1~4
1	Vehicle ID and Direction	Bit 0 represents the vehicle's direction of travel, where 0 indicates forward and 1 indicates reverse. Bits 4 to 7 represent the vehicle

		ID, with IDs ranging from 0 to 15.
2	CRC Checksum	Checksum, calculated over the range from (Device ID) to (Vehicle ID and Direction).
1	Frame End	End of Frame Character (0x7F)

6. When a vehicle completes a full passage through the loop, the format of the vehicle detector's serial port output information is as follows:

Number of Bytes	Meaning of Bytes	Description
1	Frame Start	0x7E
1	Device ID	Configurable, range: 0 to 150, default: 0
1	Board ID	0-3
2	Message Body Length	The order is <High Byte 0x00, Low Byte 0x0A>.
1	Command Byte	0x1A
1	Direction and Lane Number	Bit[3~0]: Lane number, 1~8 Bit[7~4]: Direction number, 1~4
1	Vehicle ID and Direction	Bit 0 represents the vehicle's direction of travel, where 0 indicates forward and 1 indicates reverse. Bits 4 to 7 represent the vehicle ID, with IDs ranging from 0 to 15.
1	Vehicle Length	0-250 (Unit: 0.1 meters)
1	Vehicle Speed	0-250 km/h
1	Lane Change Indicator	0: Normal Driving 1: Lane Change
1	Record Type and Vehicle Type	**Bit 0~bit 3: Record Type, ranging from 0 to 15** 0: Normal 1: Overspeed

		2: Wrong-way 3: Line Crossing 4: Lane Deviation 5~15: Reserved (Priority: Wrong-way, Overspeed, Line Crossing, Lane Deviation) **Bit 4~bit 7: Vehicle Type, ranging from 0 to 15** 0: Unknown Vehicle Type 1: Light Truck 2: Medium Truck 3: Heavy Truck 4: Small Car 5: Large Car 6: Trailer 7: Tractor 8: Extra-heavy Truck 9: Motorcycle 10~15: Reserved
3	Time when the vehicle crosses the loop	The vehicle crossing the loop time is composed of 3 bytes, forming a 24-bit time data. The high byte comes first, followed by the low byte, and the time unit is milliseconds.
2	CRC Checksum	Checksum, calculated over the range from (Device ID) to (Vehicle ID and Direction).
1	Frame End	End of Frame Character (0x7F)

A complete vehicle passage through the loop includes the following scenarios:

1> Normal Driving: The vehicle passes from the front loop to the rear loop.

2> Wrong-Way Driving: The vehicle passes from the rear loop to the front loop.

3> Limited Time: If the vehicle only triggers the front or rear loop within a specified time frame (e.g., the vehicle enters the front loop and has not entered the rear loop within 1

second after exiting the front loop), it is considered a complete passage event. Regardless of whether it enters or exits the front or rear loop, the final direction determination is considered forward. Vehicles changing lanes at the loop can easily cause these scenarios.

7. Heartbeat data, output every 5 seconds, the vehicle detector serial port outputs information in the following format:

Number of Bytes	Meaning of Bytes	Description
1	Frame header	0x7E
1	Device ID	Configurable, range: 0 to 150, default: 0
1	Board ID	0-3
2	Message Body Length	The order is <High Byte 0x00, Low Byte 18>.
1	Command Byte	0xFF
1	Supported number of lanes, denoted as "n"	2 or 4
1	Direction and Lane Number 1	Bit[3~0]: Lane number, ranging from 1 to 8 Bit[7~4]: Direction number, ranging from 1 to 4
1	Lane Status 1	Lane Status 1: 0: Normal 1: Front loop fault 2: Rear loop fault

		3: Both front and rear loops fault 4: Sensor fault
1	Direction and Lane Number 2	Bit[3~0]: Lane number, ranging from 1 to 8 Bit[7~4]: Direction number, ranging from 1 to 4
1	Lane Status 2	Lane Status 1: 0: Normal 1: Front loop fault 2: Rear loop fault 3: Both front and rear loops fault 4: Sensor fault
1	Direction and Lane Number 3	Bit[3~0]: Lane number, ranging from 1 to 8 Bit[7~4]: Direction number, ranging from 1 to 4
1	Lane Status 3	Lane Status 1: 0: Normal 1: Front loop fault 2: Rear loop fault 3: Both front and rear loops fault 4: Sensor fault
1	Direction and Lane Number 4	Bit[3~0]: Lane number, ranging from 1 to 8 Bit[7~4]: Direction number, ranging from 1 to 4
1	Lane Status 4	Lane Status 1:

		0: Normal 1: Front loop fault 2: Rear loop fault 3: Both front and rear loops fault 4: Sensor fault
1	Direction and Lane Number 5	Bit[3~0]: Lane number, ranging from 1 to 8 Bit[7~4]: Direction number, ranging from 1 to 4
1	Lane Status 5	Lane Status 1: 0: Normal 1: Front loop fault 2: Rear loop fault 3: Both front and rear loops fault 4: Sensor fault
1	Direction and Lane Number 6	Bit[3~0]: Lane number, ranging from 1 to 8 Bit[7~4]: Direction number, ranging from 1 to 4
1	Lane Status 6	Lane Status 1: 0: Normal 1: Front loop fault 2: Rear loop fault 3: Both front and rear loops fault 4: Sensor fault
1	Direction and Lane Number 7	Bit[3~0]: Lane number, ranging from 1 to 8

		Bit[7~4]: Direction number, ranging from 1 to 4
1	Lane Status 7	Lane Status 1: 0: Normal 1: Front loop fault 2: Rear loop fault 3: Both front and rear loops fault 4: Sensor fault
1	Direction and Lane Number 8	Bit[3~0]: Lane number, ranging from 1 to 8 Bit[7~4]: Direction number, ranging from 1 to 4
1	Lane Status 8	Lane Status 1: 0: Normal 1: Front loop fault 2: Rear loop fault 3: Both front and rear loops fault 4: Sensor fault
2	CRC checksum value	Checksum, calculated from (Device ID) to (Fault Synchronization Word)
1	Frame footer	End Character (0x7F)

8. Vehicle flow data, format of vehicle detector's serial port output information is as follows:

Number of Bytes	Byte Meaning	Description
1	Frame Start	0x7E

1	Device ID	Configurable, range: 0 to 150, default: 0
1	Board ID	0-3
2	Message Body Length	The order is <High Byte 0x00, Low Byte 0x34>.
1	Command Byte	0xF0
1	Number of lanes	4
6	Statistical Period Time Interval	The six bytes represent year, month, day, hour, minute, and second, respectively.
1	Direction and Lane Number 1	Bit[3~0]: Lane number, ranging from 1 to 8 Bit[7~4]: Direction number, ranging from 1 to 4
2	Lane 1 Forward Vehicle Count	Count of vehicles traveling in the forward direction
1	Lane 1 Reverse Vehicle Count	Count of vehicles traveling in the reverse direction
1	Lane 1 Occupancy Rate	Percentage of Lane Occupancy
1	Lane 1 Average Vehicle Speed	Average Vehicle Speed (Unit: km/h)
2	Lane 1 Average Vehicle Spacing	Average Vehicle Headway (Unit: meters)
2	Lane 1 Average Vehicle Headway Time	Average Vehicle Headway Time (Unit: seconds)
1	Lane 1 Percentage of Following Vehicles	Percentage of Following Events
1	Direction and Lane	Bit[3~0]: Lane number, ranging from 1 to

	Number 2	8 Bit[7~4]: Direction number, ranging from 1 to 4
2	Lane 2 Forward Vehicle Count	Count of vehicles traveling in the forward direction
1	Lane 2 Reverse Vehicle Count	Count of vehicles traveling in the reverse direction
1	Lane 2 Occupancy Rate	Percentage of Lane Occupancy
1	Lane 2 Average Vehicle Speed	Average Vehicle Speed (Unit: km/h)
2	Lane 2 Average Vehicle Spacing	Average Vehicle Headway (Unit: meters)
2	Lane 2 Average Vehicle Headway Time	Average Vehicle Headway Time (Unit: seconds)
1	Lane 2 Percentage of Following Vehicles	Percentage of Following Events
1	Direction and Lane Number 3	Bit[3~0]: Lane number, ranging from 1 to 8 Bit[7~4]: Direction number, ranging from 1 to 4
2	Lane 3 Forward Vehicle Count	Count of vehicles traveling in the forward direction
1	Lane 3 Reverse Vehicle Count	Count of vehicles traveling in the reverse direction
1	Lane 3 Occupancy Rate	Percentage of Lane Occupancy

1	Lane 3 Average Vehicle Speed	Average Vehicle Speed (Unit: km/h)
2	Lane 3 Average Vehicle Spacing	Average Vehicle Headway (Unit: meters)
2	Lane 3 Average Vehicle Headway Time	Average Vehicle Headway Time (Unit: seconds)
1	Lane 3 Percentage of Following Vehicles	Percentage of Following Events
1	Direction and Lane Number 4	Bit[3~0]: Lane number, ranging from 1 to 8 Bit[7~4]: Direction number, ranging from 1 to 4
2	Lane 4 Forward Vehicle Count	Count of vehicles traveling in the forward direction
1	Lane 4 Reverse Vehicle Count	Count of vehicles traveling in the reverse direction
1	Lane 4 Occupancy Rate	Percentage of Lane Occupancy
1	Lane 4 Average Vehicle Speed	Average Vehicle Speed (Unit: km/h)
2	Lane 4 Average Vehicle Spacing	Average Vehicle Headway (Unit: meters)
2	Lane 4 Average Vehicle Headway Time	Average Vehicle Headway Time (Unit: seconds)
1	Lane 4 Percentage of Following Vehicles	Percentage of Following Events
2	CRC Checksum	Checksum, calculated from (Device ID) to

		(Lane 4 Percentage of Following Vehicles)
1	Frame footer	End Character (0x7F)

Note: The flow data is based on the device's RTC (Real-Time Clock) time and is sent according to the set statistical period.

9. Setting the vehicle detector date/time, the format of the information sent from the PC-side serial port is as follows:

Number of Bytes	Byte Meaning		Description
1	Frame Start		0x7E
1	Command Byte (CMD)		0x40
1	Data Area Length (LENGTH)		7
1	Data Area (DATA)	Device ID	Value range: 0 to 3. Typically, setting the main device is sufficient, corresponding to ID 0.
1		Year	Valid range: 16 to 99
1		Month	Valid range: 1 to 12
1		Date	Valid range: 1 to 31
1		Hour	Valid range: 0 to 23
1		Minute	Valid range: 0 to 59
1		Second	Valid range: 0 to 59
2	CRC Checksum		CRC checksum, calculated from CMD + LENGTH + DATA.
1	Frame End		End Character (0x7F)

The format of the response data after executing the vehicle detector time setting command

is as follows:

Number of Bytes	Byte Meaning		Description
1	Frame Start		0x7E
1	Command Byte (CMD)		0xAC
1	Data Area Length (LENGTH)		2
1	Data Area (DATA)	Response Command Code	0x40 (Response specific to this command)
1		Acknowledgement Code	ACK_CODE
2	CRC Checksum		CRC checksum, calculated from CMD + LENGTH + DATA.
1	Frame End		End Character (0x7F)

ACK_CODE is the response code from the vehicle detector to the PC's sent information. It is defined as follows:

- "0x00": Execution successful.
- "0xE0": Data length error from the PC.
- "0xE1": Data checksum error.
- "0xE5": Command execution failed.

Additionally, it is recommended to start a 1-second timeout timer after the PC-side data is sent. If no response is received within 1 second, a timeout error occurs, and the corresponding protocol data can be resent.

8.3 Appendix: CRC Checksum Algorithm

CRC checksum algorithm adopts ITU-TV.41's advises and using $g(x)= x^{16} + x^{15} + x^{11}+x^8+x^6+x^5+x^4+x^3+x^2+1$ to generate a checksum for your data. The CRC checksum value for the given data is `0xC4BF`.

CRC check range: <CMD> <LENGTH> <DATA>

The CRC verification function is as follows.

```
SINT GetCRCWord(UCHAR *pMsg, UINT iMsgLen)
{
    UCHAR cTmp;
    UINT i,j;
    UINT wCRCRet=0;
    for (i=0;i<iMsgLen;i++)
    {
        cTmp = *pMsg++;
        for (j=0;j<8;j++)
        {
            if (wCRCRet & 0x8000)
            {
                wCRCRet ^= CON_CRC;
            }
            wCRCRet <<=1;
            if (cTmp & 0x80)
            {
                wCRCRet++;
            }
            cTmp <<=1;
        }
    }
    for (i=0;i<2;i++)
    {
        for (j=0;j<8;j++)
        {
            if (wCRCRet & 0x8000)
            {
                wCRCRet ^= CON_CRC;
            }
            wCRCRet <<=1;
```

```
            }
        }
        return wCRCRet;
    }
```