User Manual

Inductive Loop Vehicle Detector

ClairLup-V4

Version: 2.1

TraffiClair Technology Co., Ltd.

Content

1. Overview....4
2. Key Features....5
3. Interfaces and Specifications....6
4. Panel and Interface Description....7
4.1 LED Indicator Explanation....7
4.2 LED Indicator Colors and Functions....7
4.3 Description of DIP Switch....8
4.4 Definition and Function of Each DIP Switch Position....8
4.5 Reset Button....9
4.6 Input Interface:....10
4.7 Output Interface:....10
4.8 The expansion output, RS485, and power input interfaces....11
4.9 The multi-function interface....11
4.10 The grounding terminal....12
5. The configuration management client....13
5.1 Parameter setting and querying....13
5.2 Serial data display....16
5.3 Wave display....17
6. Wiring Instruction....18
6.1 The rear panel wiring instruction....18
The INPUT interface....18
The OUTPUT interface....19
EXT output....19
RS485 interface....19
DC-IN interface....20
Protective ground....20

6.2 Wiring instruction....21
7. Cascading Instructions....22
7.1 Cascading wiring....22
7.2 Cascading dip switch settings....22
7.3 Cascading example....23
8. Communication Protocol....25
8.1 Communication Protocol....25
8.2 Detailed Explanation of the Communication Protocol....26
When a vehicle enters the loop, the vehicle detector serial port outputs information in the following format:....26
When a vehicle leaves the loop, the vehicle detector serial port outputs information in the following format:....27
Heartbeat data, output every 5 seconds, the vehicle detector serial port outputs information in the following format:....27
Here are the example data:....28
8.3 Appendix: CRC Checksum Algorithm....29

1. Overview

The CLAIRLUP-V4 inductive loop vehicle detector is equipped with a high-performance processor, a stable and reliable circuit design, and advanced detection algorithms that are specially optimized for real-time detection, anti-interference, anti-deadlock, environmental status tracking, and abnormal state handling. This ensures long-term maintenance-free operation of the detector, significantly reducing user operating costs and enhancing the value of their systems. The CLAIRLUP-V4 detector is widely applicable in vehicle detection applications on urban roads, highways, bridges, tunnels, as well as in systems such as barrier toll collection.



Figure1: ClairLup-V4 inductive loop detector

2. Key Features

- Supports close placement of loops, with a minimum distance between loops of less than 10cm.
- Supports cascade function, effectively avoiding interference between loops of different devices when multiple devices are cascaded.
- Supports cascade line self-checking function to ensure reliable connection of cascade lines.
- Detection response time is less than 8 milliseconds, ensuring reliable detection of high-speed passing vehicles on various roads.
- Supports 4-level loop frequency adjustment.
- Supports direction logic detection, allowing the output of corresponding pulse signals based on the direction of the vehicle.
- Fast and intelligent background frequency update, tracking real-time changes in environmental parameters.
- Supports advanced intelligent anti-deadlock algorithm to ensure long-term maintenance-free operation.
- Supports real-time display of passing vehicle waveforms, providing detailed information about the vehicle passing through the loop, facilitating on-site problem analysis, and troubleshooting, making installation and environmental issues clear immediately.
- Supports real-time loop fault detection and automatic recovery to normal operation after fault elimination.
- Supports open-circuit and short-circuit detection of loops and differentiates loop fault types through the fault indicator lights.
- Flexible I/O output capability, with configurable I/O output functions.

3. Interfaces and Specifications

- 4 loop input interfaces, supporting protection measures such as air discharge, TVS, and transformer isolation.
- 1 RS485 serial port with adjustable baud rate (57600, 115200) through DIP switch settings.
- 5 I/O output interfaces, supporting various output function configurations.
- Supports 8 levels of sensitivity and 4 levels of loop frequency, adjustable through DIP switch settings.
- Loop inductance range: 20~2000uH.
- 12/24VDC input power with reverse connection protection.
- Rated power consumption: <1.5W.
- Operating temperature: -40˚C to +85˚C.
- Operating humidity: 10% to 95% (non-condensing).
- Dimensions: 118mm (W) * 98mm (D) * 28mm (H).

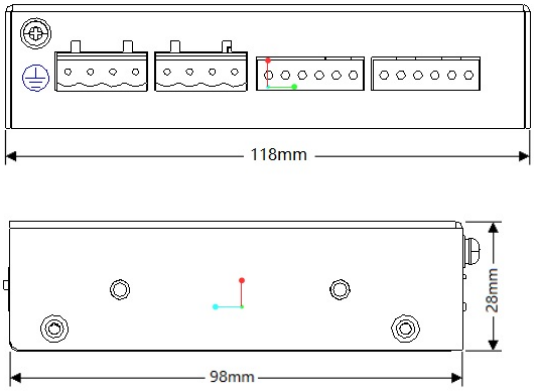

Figure2: Mechanical drawing of ClairLup-V4

4. Panel and Interface Description

4.1 LED Indicator Explanation

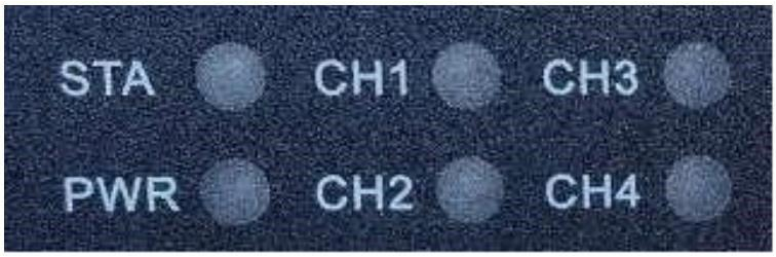

4.2 LED Indicator Colors and Functions

LED	Color	Function Description
PWR	Green	Power supply indicator
STA	Red/Green	Rapid Red Flash (0.5 seconds on and off): Self-test failure. Indicates a failure during the self-check process of the device. Red Flash (1 second on, 1 second off): Indicates a cascading connection failure when the device is used individually or in a cascaded configuration. Green Flash: Indicates normal operating status of the system. It signifies that the device is functioning correctly. Alternating Red and Green: Indicates that the vehicle detector is in waveform output mode.
CH1-CH4	Red/Green	Solid Red: Indicates an open circuit or disconnected loop. Red Flash: Indicates a short circuit or the loop's

		inductance value being too small. Solid Green: Indicates the presence of a vehicle. Off: Indicates no vehicle detected.

4.3 Description of DIP Switch

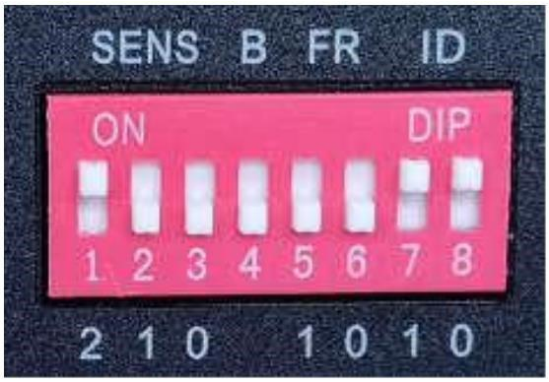

4.4 Definition and Function of Each DIP Switch Position

Dip switch	Functions
SENS (2-0)	Sensitivity Setting DIP Switch, with 3 DIP switch positions. The value range is from 000 to 111, where 000 indicates the highest sensitivity, and 111 indicates the lowest sensitivity. The sensitivity decreases progressively from 000 to 111. In general, it is recommended to use the middle sensitivity, such as 011 or 100. For environments with high interference, it is advisable to use low sensitivity.
B	Setting RS485 baud rate, with 1 dip switch: 0: 9600 1: Use the baud rate set by software, optional baud rates are 4800, 9600, 19200, 38400, 57600, 115200 (recommended baud

	rate for waveform output).
FR (1-0)	Loop Frequency Setting DIP Switch, with 2 DIP switches. FR (1-0) is defined as follows: 00: Low frequency 01/10: Medium frequency 11: High frequency
ID (1-0)	Device ID, consisting of two dip switches, with 2 as the high bit and 1 as the low bit: 00: Master device 01: Slave device 1 10: Slave device 2 11: Reserved, not in use

Note 1: "ON" corresponds to value "0," while "OFF" corresponds to value "1."

Note 2: All DIP switch settings take effect immediately without the need to manually reset the detector. When changing the loop frequency, the detector will automatically restart and quickly enter the working state.

Note 3: When devices are cascaded, only one main device is allowed, while the rest are all sub-devices. Please refer to the cascade instructions for more details.

4.5 Reset Button



The reset button is used to reset the detector, but under normal circumstances, users do not need to reset the device.

4.6 Input Interface:

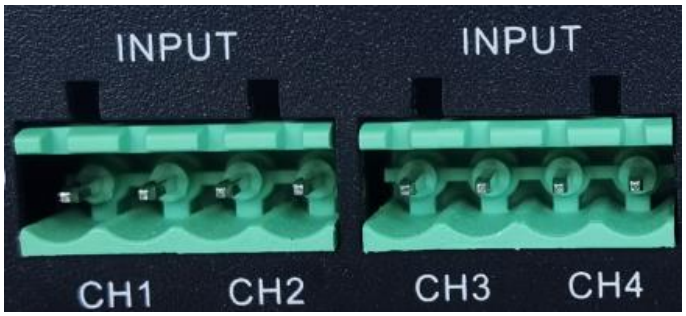

The CH1 to CH4 terminal blocks are used to connect the four detection loops.

4.7 Output Interface:

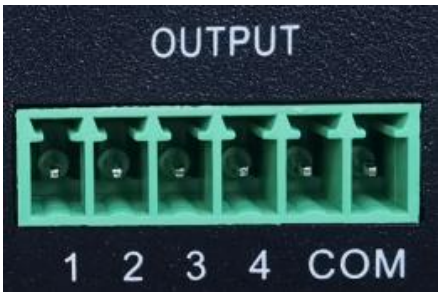

The terminal blocks labeled 1 to 4 are the loop channels CH1 to CH4 for detection output. COM is the common terminal (the two common terminals are internally connected together in the device). The detector supports multiple output functions, which can be flexibly configured according to project requirements. Please refer to the output function settings instructions in the configuration management client for specific details. By default, there is an output.

4.8 The expansion output, RS485, and power input interfaces



The EXT (Expansion) output interface can be configured as the detection output for CH1 to CH4 loop channels. By default, it is set as the presence output for CH4 loop channel. It can be configured as normally open (NO) or normally closed (NC) mode.

The RS485 interface is used for communication with the upper computer or control system. It allows for outputting detection data and configuring the device's operational parameters, among other functions.

The DC IN power input interface supports 12V (or 24V) DC power input and is equipped with reverse polarity protection. The overall power consumption of the device is less than 1.5W. The "+ -" symbols are marked here to prevent personnel at the installation site from mistakenly connecting it to a 220V AC power source without proper understanding.

4.9 The multi-function interface



The front panel of the device features a 4-pin multi-function interface that serves as both an internal debugging interface and a cascading interface. When cascading devices, you only

need to connect the corresponding 1/2/3 terminals of each cascaded device. The 4th terminal does not need to be connected. This means that you connect all the 1st terminals of the cascaded devices together, connect all the 2nd terminals together, and similarly handle the 3rd terminals.

4.10 The grounding terminal



The ground loop is highly susceptible to lightning interference. During normal operation, it is essential that the grounding terminal of the vehicle detector is reliably connected to the cabinet's protective ground.

5. The configuration management client

5.1 Parameter setting and querying



- Device ID Setting: The device ID can be set within the range of 0 to 255. The data protocol defines the device ID field. The device responds only to commands with an ID of "0" or the same as the set ID.
- Sensitivity Setting: The device supports sensitivity setting via DIP switches or software. There are 10 levels of sensitivity defined by software, which are independent of the DIP switch settings. This allows for flexible remote adjustment of the device sensitivity.
- Baud Rate Setting: When the baud rate DIP switch is set to "OFF", the baud rate configured via software is used. Baud rates available for software configuration include 4800, 9600, 19200, 38400, 57600, and 115200.
- Loop Operating Frequency Setting: The device supports loop operating frequency setting via DIP switches or software. Software provides three ranges of frequency: low, medium,

and high. After setting the loop frequency via software, the device will automatically reset and operate according to the configured frequency range.

- Query Device Version: Retrieve the current version information of the device.
- Query Loop Frequencies: Obtain the working frequencies of all loop channels. There will be no interference between the four channels of the same detector. When loops are distributed across different detectors, arranging the loops reasonably based on their frequencies can help maximize the frequency difference between adjacent loops, effectively reducing interference between loops. When using multiple detectors, it's recommended to utilize the cascade function to completely eliminate interference between loops.
- Output Delay Setting: Set the delay time within the range of 0 to 1 second. Output delay is effective for both presence and departure pulses. For example, in the case of presence output, the presence signal will continue to be maintained after the vehicle leaves the loop until the delay time elapses before releasing the departure signal. The default delay time is 200 milliseconds, which can be adjusted as needed.
- RS485 Output Control: If protocol integration is not needed and only IO output functions are used, it is recommended to disable RS485 output. When serial port functionality is enabled, the data display window will continuously show the detection data received through the serial port.
- Abnormal End Parameter Setting: Abnormal end refers to situations where changes in loop parameters due to loop vibration or other reasons cause the detector to remain in the presence state even after the vehicle has left the loop. This is resolved by setting parameters such as inductance offset and allowable duration to eliminate this abnormal state.
- Signal Filtering Setting: Filter interference signals within a specified frequency range. When interference signals are superimposed on normal vehicle detection signals, they will not affect the detector's detection function. Default settings are typically sufficient for

this purpose.

- Output Mode Setting: The four outputs can be independently set to normally open or normally closed modes. Outputs 1 to 4 default to normally open mode, meaning they are closed when a vehicle is present and open when the vehicle leaves.
- Output Function Settings: Each output of the detector can be independently configured for different functions. Taking output 1 as an example, the functions are described as follows:
    1) Presence Output: The output remains active when a vehicle is present. It releases the output signal only after the vehicle leaves the loop and the set output delay time elapses.
    2) Entry Pulse: When a vehicle enters loop 1, a pulse signal with a width of 200 milliseconds is immediately outputted. This can be used for capturing signals when vehicles enter the loop, or for applications such as vehicle speed measurement when combined with entry pulses from loop 2.
    3) Exit Pulse: When a vehicle leaves loop 1 and the set delay time is reached, a 200-millisecond pulse signal is immediately outputted.
    4) Direction 1 to 2 Entry Pulse: When a vehicle passes through loop 1 and enters loop 2, a 200-millisecond pulse signal is immediately outputted. This can be used for capturing the front photo of a vehicle in specific direction logic or for vehicle counting.
    5) Direction 1 to 2 Exit Pulse: When a vehicle passes through loop 1, then loop 2, and leaves loop 2, a 200-millisecond pulse signal is outputted. This can be used for capturing the rear photo of a vehicle in specific direction logic or for vehicle counting.
- Extended Output Function Settings: In some applications, certain channels require two outputs. The detector provides an independent extended output interface, which can be flexibly set as the output for loop channels 1 to 4. By default, it is set to the presence

output of loop channel 4, in normally closed mode.

Note: Parameter settings are automatically saved upon successful configuration and will not be lost in the event of power failure.

5.2 Serial data display

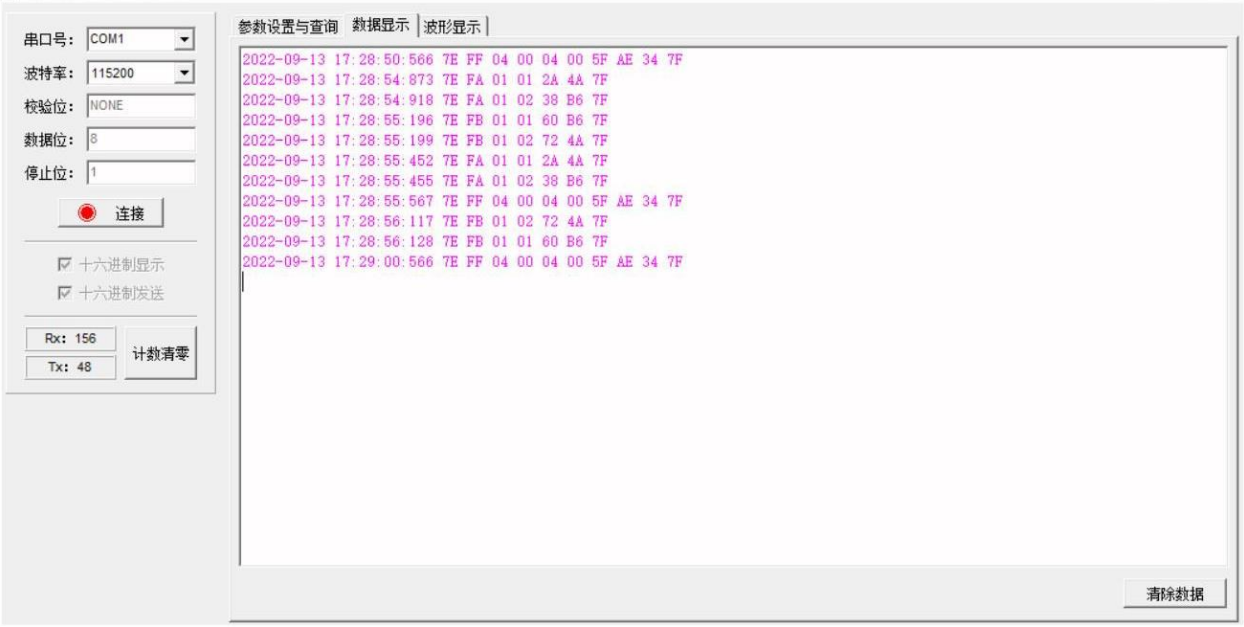

When the RS485 serial port output of the detector is enabled, this data window will display the detection data from the detector, facilitating protocol integration development.

5.3 Wave display

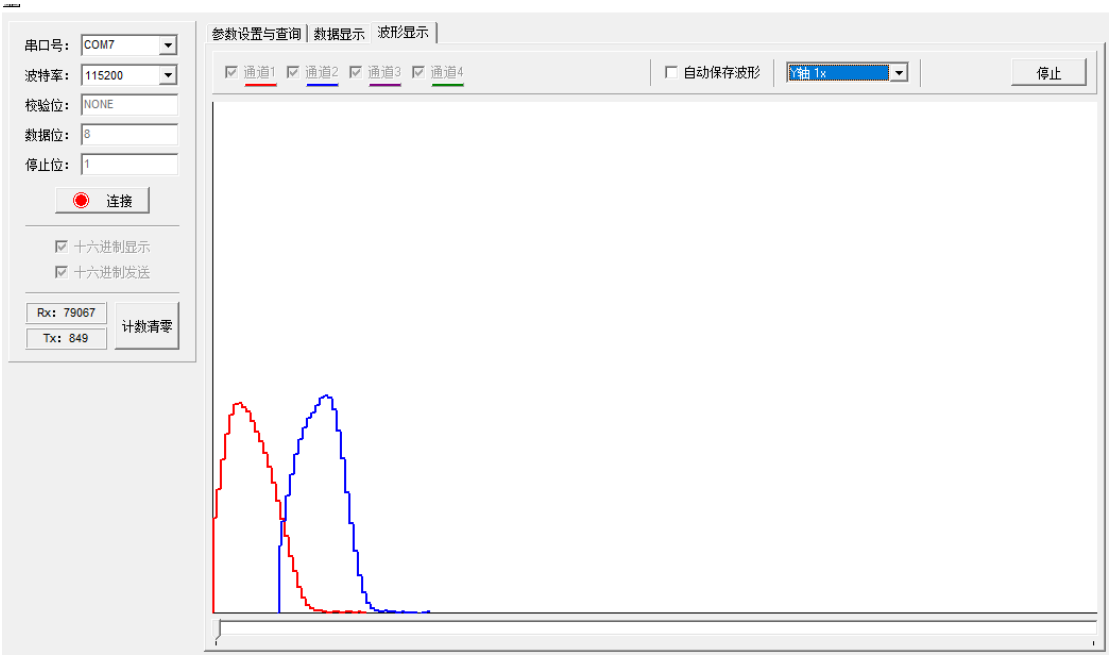

The waveform display interface provides real-time recording of the detection data changes when a vehicle passes through the corresponding loop. By continuously observing the waveform when a vehicle passes through the loop, it greatly facilitates on-site problem analysis and localization. Installation issues and environmental issues can be easily identified. When the detector continuously outputs waveform data, the configuration management terminal will not execute any other settings or query commands until the waveform output stops (all channels have vehicles leave the detector loop or the detector is reset), and only then can other operations be performed again. This feature ensures that the waveform data can be captured and analyzed effectively without interruption.

6. Wiring Instruction

6.1 The rear panel wiring instruction

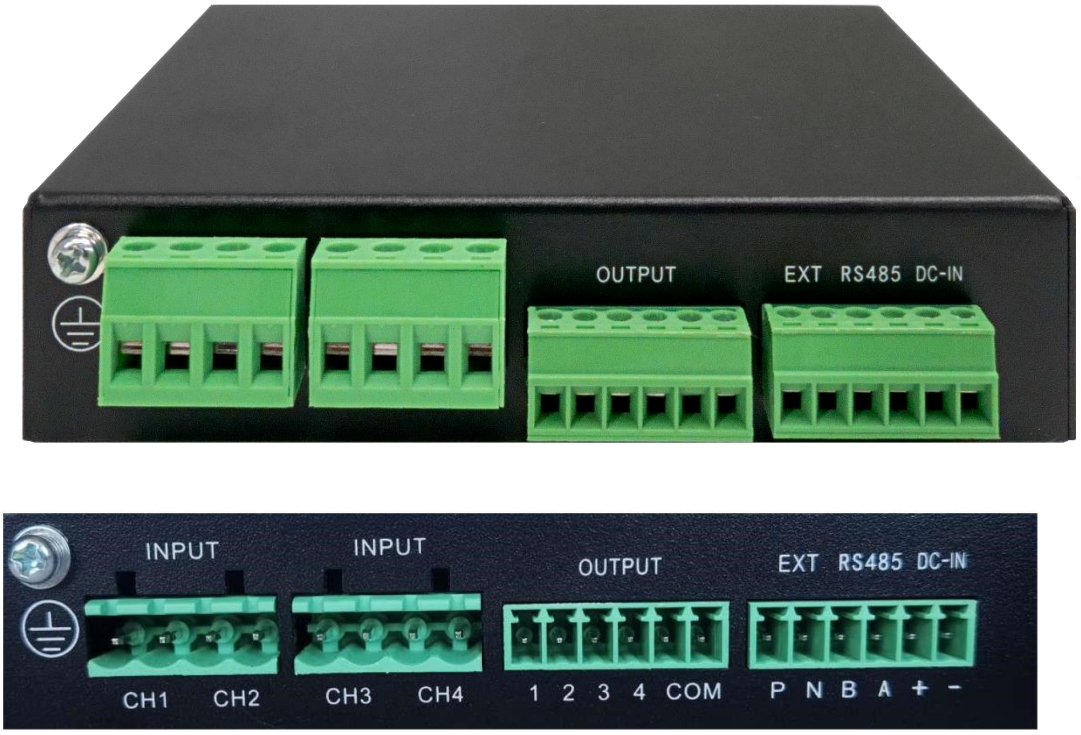

Figure3: Device rear panel

The INPUT interface

The INPUT interface on the rear panel is used for connecting the four detection loops (CH1 to CH4). Typically, the loops have 4 to 5 turns. However, if the loops are installed on a reinforced mesh road surface, it is recommended to have 6 to 8 turns. The loop leads must be twisted together in pairs, with at least 20 twists per meter to minimize interference.

The OUTPUT interface

The OUTPUT interface on the rear panel is used for the detection outputs of the four loops (1 to 4), with COM as the common terminal.

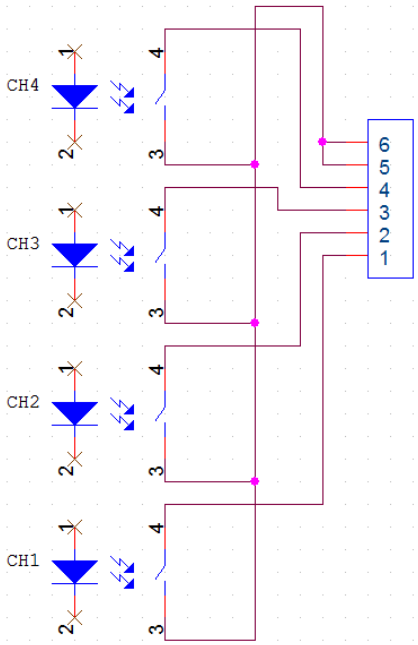

Figure 4: Schematic diagram of detector output interface (solid-state relay output)

EXT output

The EXT interface is an independent solid-state relay output interface, and by default, it is configured as the presence output of loop channel 4 in normally closed mode.

RS485 interface

The RS485 interface is used to configure and query the operational parameters of the detector, as well as to output detection data according to the protocol. When wiring, it is

recommended to use shielded twisted pair cable to connect with the corresponding device on the A and B terminals. The shield layer of the cable should be connected to the equipment chassis or protective ground. When using the RS485 interface, make sure that the baud rate of both devices is set to the same value.

DC-IN interface

The DC IN is the DC power input interface, and it operates within a voltage range of 9 to 30VDC. Typically, a 12V or 24V DC power supply is connected to this interface. The positive and negative terminals of the power supply can be connected interchangeably without any specific polarity requirement.

Protective ground

When wiring, simply connect the protective ground to the protective ground of the equipment cabinet using a wire.

6.2 Wiring instruction

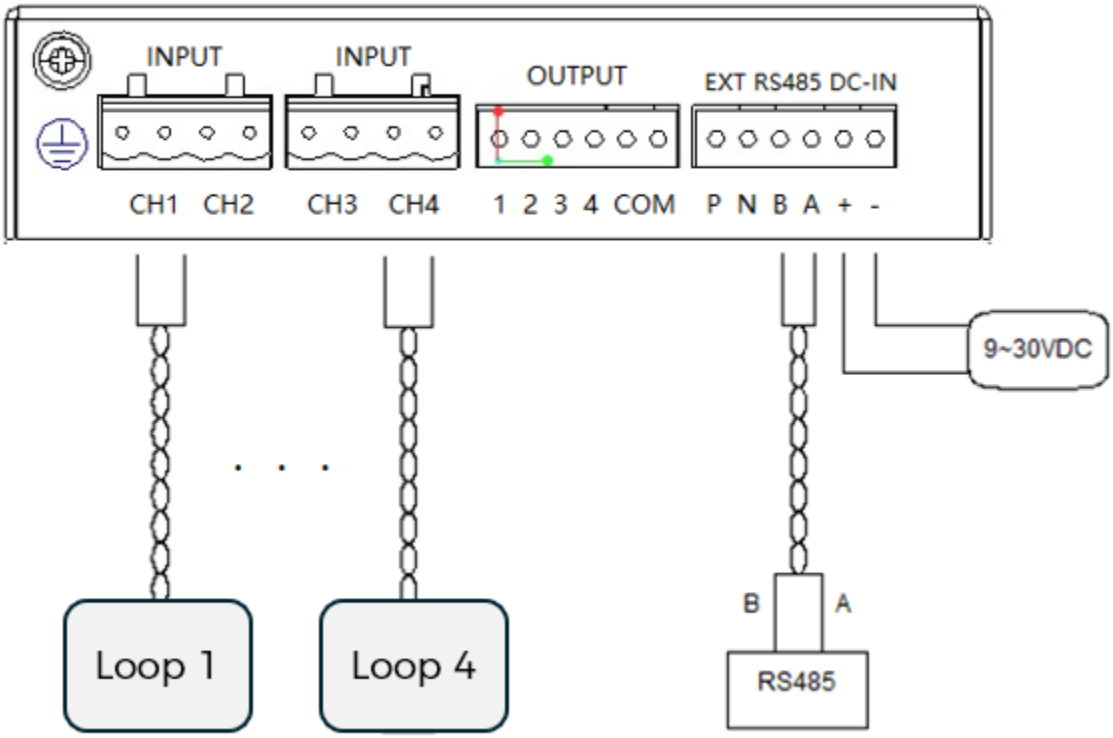

Figure 5: Schematic diagram of loop, RS485, and power supply wiring

7. Cascading Instructions

7.1 Cascading wiring

CLAIRLUP-V4 detector supports cascading functionality, which can be achieved through the multi-function interface on the front panel. The diagram below illustrates the cascading connection of three devices. When cascading more devices, please follow the diagram below and connect them in sequence. Considering the drive capability and signal quality requirements, please do not exceed eight devices in cascade.

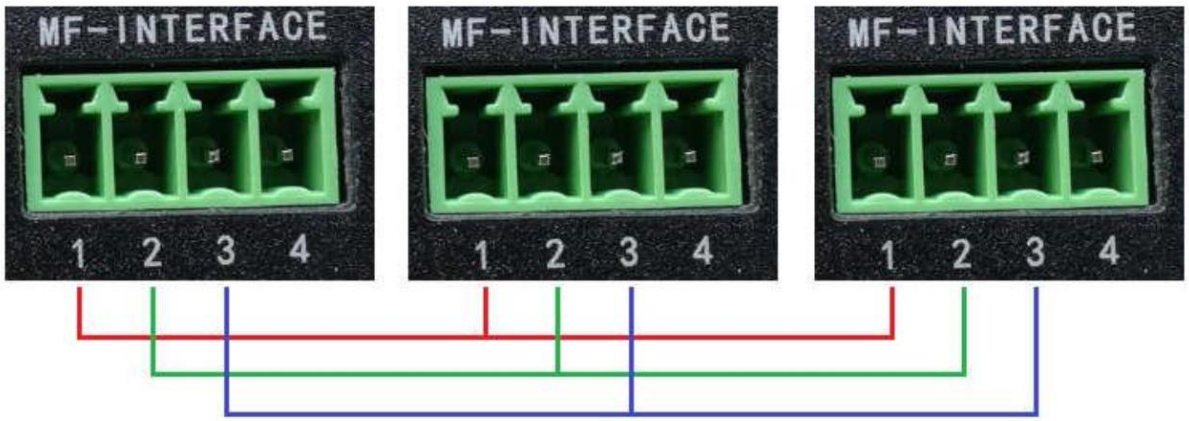

Figure 6: Cascading wiring schematic

7.2 Cascading dip switch settings

By setting the ID DIP switch, you can configure the master-slave mode for the cascaded devices. Only one device can be set as the master device, while the rest are set as slave devices. The device ID DIP switch is defined as follows:

- 00: Master device
- 01: Slave device 1
- 10: Slave device 2
- 11: Reserved, not used

Please ensure that only one device is set as the master device in a cascaded setup, while the other devices are set as slave devices.

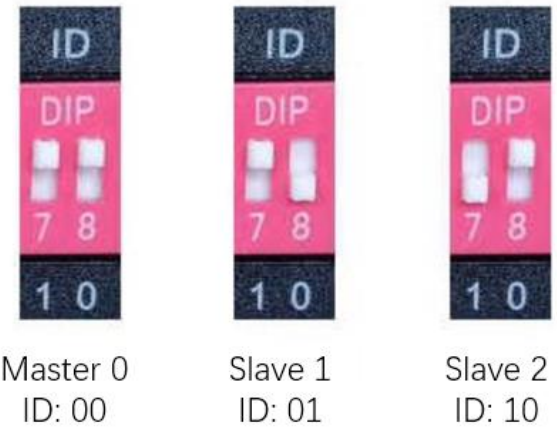

Figure 7: Cascaded device ID dip switch settings

7.3 Cascading example

Taking the example of cascading three detectors, the device ID settings and corresponding loop channel connections, as shown in the diagram below, can eliminate interference between all the loops.

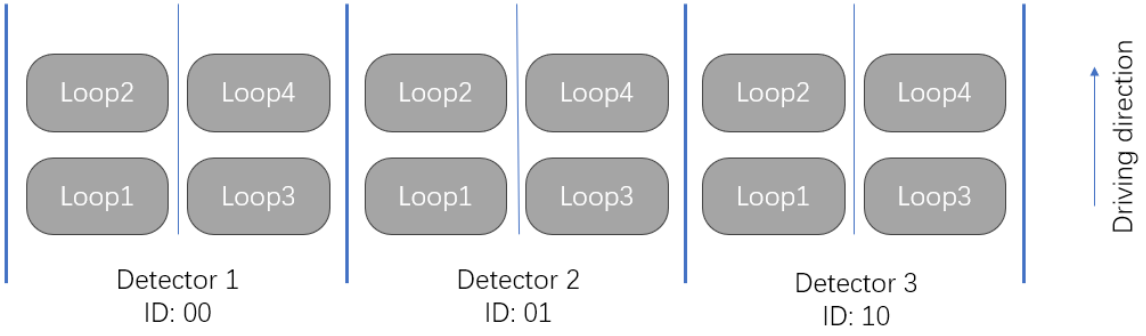

Figure 8: Schematic diagram of device ID settings and loop arrangement when cascading 3 detectors

As shown in the diagram, when multiple devices are cascaded, the loop channels must be connected strictly according to the indicated sequence. The device IDs for the slave devices, except for the master device, should be set as 01/10/01/10/01/10... following the pattern.

By referring to the above example and cascading the devices as well as arranging the loops accordingly, the adjacent loop lanes can be closely positioned and eliminate interference between loops. This design reduces the difficulty of on-site loop debugging, enhances system stability and accuracy, and improves the overall value of the system.

8. Communication Protocol

8.1 Communication Protocol

This device uses the RS485 custom communication protocol, and the serial port settings and communication format are as follows.

1. Serial Port Configuration

Baud Rates: 4800, 9600, 19200, 38400, 57600, 115200

Data Bits: 8

Parity: None

Stop Bits: 1

2. The protocol format is as follows (the same protocol format is used for both receiving and sending data):

0x7E	CMD	LENGTH	DATA	CRC	0x7F

- **0x7E**: Frame header
- **CMD**: Command byte, 1 byte
- **LENGTH**: Number of bytes in the DATA section, 1 byte, ranging from 0 to 100
- **DATA**: Data section, which can be empty and has a maximum size of 100 bytes
- **CRC**: CRC checksum value (CRC algorithm as described in the appendix), 2 bytes, calculated over all bytes including CMD, LENGTH, and all bytes in DATA; the high byte of CRC comes first, followed by the low byte
- **0x7F**: Frame footer

Note: In order to distinguish special data, such as frame header (0x7E) and frame footer (0x7F), contained within the actual transmitted data (CMD+LENGTH+DATA+CRC), an escape

character 0x7D must be added before such data. The specific procedure is as follows: during transmission, if the data contains 0x7E, 0x7F, or 0x7D, prepend 0x7D to that data, then XOR that data with 0x20 before sending it. During reception, if 0x7D is received, remove it from the received buffer and XOR the next byte following 0x7D with 0x20 to obtain the original value of that data. The LENGTH field represents the value before adding escape characters. For example, if the original length of DATA is 3, and you add one escape character, the length becomes 4, but the LENGTH field value remains 3.

8.2 Detailed Explanation of the Communication Protocol

When a vehicle enters the loop, the vehicle detector serial port outputs information in the following format:

Number of Bytes	Meaning of Bytes		Description
1	Frame header		0x7E
1	Command byte (CMD)		0xFA
1	Number of bytes in the DATA section (LENGTH)		1
1	Data section (DATA)	Channel Number	The value range is 1 to 4, corresponding to loop channels 1 to 4, indicating that a vehicle has entered the current channel.
2	CRC checksum value		CRC Check, Check Range is: CMD+LENGTH+DATA
1	Frame footer		End Character (0x7F)

When a vehicle leaves the loop, the vehicle detector serial port outputs information in the following format:

Number of Bytes	Meaning of Bytes		Description
1	Frame header		0x7E
1	Command byte (CMD)		0xFB
1	Number of bytes in the DATA section (LENGTH)		1
1	Data section (DATA)	Channel Number	The value range is 1 to 4, corresponding to loop channels 1 to 4, indicating that a vehicle has left the current channel.
2	CRC checksum value		CRC Check, Check Range is: CMD+LENGTH+DATA
1	Frame footer		End Character (0x7F)

Heartbeat data, output every 5 seconds, the vehicle detector serial port outputs information in the following format:

Number of Bytes	Meaning of Bytes	Description
1	Frame header	0x7E
1	Command byte (CMD)	0xFF
1	Number of bytes in the DATA section	4

	(LENGTH)		
1	Data section (DATA)	Reserved	The value is 0
1		Number of Loop Channels	Fixed at 4
1		Reserved	The value is 0
1		Vehicle Detector Channel Operational Status	Bit[1~0]: Corresponding to Channel 1 Status Bit[3~2]: Corresponding to Channel 2 Status Bit[5~4]: Corresponding to Channel 3 Status Bit[7~6]: Corresponding to Channel 4 Status The definition of loop channel status is as follows, taking Channel 1 as an example: Bits [1~0]: - "00" indicates loop channel initialization failure. - "01" indicates loop open circuit or not connected. - "10" indicates loop short circuit or low inductance. - "11" indicates loop is normal.
2	CRC checksum value		CRC Check, Check Range is: CMD+LENGTH+DATA
1	Frame footer		End Character (0x7F)

Here are the example data:

1) Vehicle enters loop 1: 7E FA 01 01 2A 4A 7F

2) Vehicle leaves loop 1: 7E FB 01 01 60 B6 7F

3) Heartbeat data: 7E FF 04 00 04 00 5F AE 34 7F (Loops 1/2 are normal, Loops 3/4 are not connected)

8.3 Appendix: CRC Checksum Algorithm

CRC checksum algorithm adopts ITU-TV.41's advises and using $g(x)= x^{16} + x^{15} + x^{11}+x^8+x^6+x^5+x^4+x^3+x^2+1$ to generate a checksum for your data. The CRC checksum value for the given data is `0xC4BF`.

CRC check range: <CMD> <LENGTH> <DATA>

The CRC verification function is as follows.

```
SINT GetCRCWord(UCHAR *pMsg, UINT iMsgLen)
{
    UCHAR cTmp;
    UINT i,j;
    UINT wCRCRet=0;
    for (i=0;i<iMsgLen;i++)
    {
        cTmp = *pMsg++;
        for (j=0;j<8;j++)
        {
            if (wCRCRet & 0x8000)
            {
                wCRCRet ^= CON_CRC;
            }
            wCRCRet <<=1;
            if (cTmp & 0x80)
            {
                wCRCRet++;
            }
            cTmp <<=1;
        }
```

```
        }
        for (i=0;i<2;i++)
        {
              for (j=0;j<8;j++)
              {
                    if (wCRCRet & 0x8000)
                    {
                          wCRCRet ^= CON_CRC;
                    }
                  wCRCRet <<=1;
             }
        }
        return wCRCRet;
}
```