User Manual

LiDAR Detector

ClairLDR-L1

Version: 1.0

TraffiClair Technology Co., Ltd.

Safety Instruction

Before using the product, please read and follow the instructions of this manual carefully and refer to relevant national and international safety regulations.

Δ Attention

Please do not disassemble or modify the lidar privately. If you need special instructions, please consult our technical support staff.

ΔLaser Safety Level

The laser safety of this product meets the following standards:

- IEC 60825-1:2014
- 21 CFR 1040.10 and 1040.11 standards, except for the deviations (IEC 60825- 1, third edition) stated in the Laser Notice No. 56 issued on May 8, 2019. Please do not look directly at the transmitting laser through magnifying devices (such as microscope, head-mounted magnifying glass, or other forms of magnifying glasses).

Eye Safety

The product design complies with Class 1 human eye safety standards. However, to maximize self-protection, please avoid looking directly at running products.



ΔSafety Warning

In any case, if the product is suspected to have malfunctioned or been damaged, please stop using it immediately to avoid injury or further product damage.

Housing

The product contains high-speed rotating parts, please do not operate unless the housing is fastened. Do not use a product with damaged housing in case of irreparable losses. To avoid product performance degradation, please do not touch the photomask with your hands.

Operation

This product is composed of metal and plastic, which contains precise

circuit electronic components and optical devices. Improper operations such as high temperature, drop, puncture or squeeze may cause irreversible damage to the product.

Power Supply

Please use the connecting cable and matching connectors provided with the lidar to supply power. Using cables or adapters that are damaged or do not meet the power supply requirements, or supply power in a humid environment may cause abnormal operation, fire, personal injury, product damage, or other property loss.

Light Interference

Some precise optical equipment may be interfered with by the laser emitted by this product, please pay attention when using it.

Vibration

Please avoid product damage caused by strong vibration. If the product's mechanical shock and vibration performance parameters are needed, please contact us for technical support.

Radio Frequency Interference

The design, manufacture and test of this product comply with relevant regulations on radiofrequency energy radiation, but the radiation from this product may still cause other electronic equipment to malfunction.

Deflagration and Other Air Conditions

Do not use the product in any area with potentially explosive air, such as areas where the air contains high concentrations of flammable chemicals, vapours or particles (like fine grains, dust or metal powder). Do not expose the product to the environment of high-concentration industrial chemicals, including near evaporating liquefied gas (like helium), so as not to impair or damage the product function.

Maintenance

Please do not disassemble the lidar without permission. Disassembly of the product may cause its waterproof performance to fail or personal injury.

Content

1. Product Profile 6
1.1 Overview 6
1.2 Mechanism 6
1.3 Specification 6
1.4 Dimensions 7
2. Electrical Interface 11
2.1 Power Supply 11
2.2 Electrical Interface 11
3. Get Ready 13
3.1 Lidar Connection 13
3.2 Software Preparation 13
4. Usage Guide 15
4.1 Operation Under Windows OS 15
4.1.1 Lidar Configuration 15
4.1.2 CLAIRLDR-L1 Windows Client Interface 16
4.1.3 Operation Procedure 19
4.1.4 Point Cloud Data Parsing 20
4.1.5 Note 20
4.2 ROS Driver Operation Under Linux OS 24
4.2.1 Hardware Connection and Test 24
4.2.2 Software Operation Example 25
5. Communication Protocol 27
5.1 MSOP Protocol 28
5.1.1 Format 28
5.1.2 Data Package Parameter Description 29
5.2 DIFOP Protocol 34
5.3 UCWP Protocol 37
5.3.1 Configuration Parameters and Status Description 39
5.3.2 Configuration Package Example 42
6. Time Synchronization 44
6.1 gPTP Synchronization 44
6.2 Lidar Internal Timing 46
7. Angle and Coordinate Calculation 47

7.1 Vertical Angle 47
7.2 Horizontal Angle 47
7.3 Distance Value and Intensity 47
7.4 Cartesian Coordinate Representation 48
8. Accurate Time Calculation 50
8.1 Single Echo Mode 50
8.1.1 Calculation of Data Packet End Time 50
8.1.2 Accurate Time Calculation of Channel Data 50
8.2 Dual Echo Mode 51
8.2.1 Calculation of Data Packet End Time 51
8.2.2 Accurate Time Calculation of Channel Data 51

1. Product Profile

1.1 Overview

The CLAIRLDR-L1, a single-line hybrid solid-state LiDAR, is developed with the advantages of high scanning speed, high resolution, and high reliability, which is suitable for large-scale operations. The CLAIRLDR-L1 well meets the requirements of 2D modeling detection and obstacle avoidance in industrial scenarios and provides accurate distance and reflectivity information with a detection range up to 150 m (@10%).

1.2 Mechanism

The CLAIRLDR-L1 hybrid solid-state lidar adopts the Time-of-Flight method. The lidar starts timing (t_1) when the laser pulses are sent out. And when the laser encounters the target object and the light returns to the sensor unit, the receiving end stops timing (t_2).

Distance = Speed of Light*(t_2 - t_1)/2

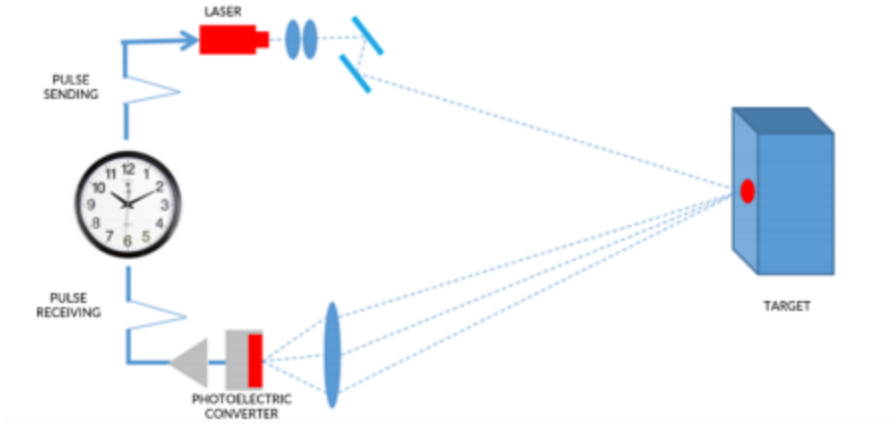

Figure 1.1 Mechanism of the CLAIRLDR-L1 Lidar

1.3 Specification

Table 1.1 Specifications of CLAIRLDR-L1

Model	CLAIRLDR-L1
Detection Method	ToF
Wavelength	905 nm
Laser Class	Class 1 (eye-safe)

Channels	1				
Detection Range	150 m (@10% reflectivity)				
Range Accuracy	±3 cm				
Data Point Generating Rate (Single Echo Mode)	150,000 pts/sec				
Horizontal FOV	120°				
Scanning Frequency	30 Hz	60 Hz	90 Hz	120 Hz	150 Hz
Horizontal Angular Resolution	0.024°	0.048°	0.072°	0.096°	0.12°
Communication Interface	Gigabyte Industrial Ethernet (1000 Base-T)				
Time Source	gPTP				
Operating Voltage	9 V ~32 VDC				
Operating Temperature	-40℃ ~ +85℃				
Storage Temperature	-40℃ ~ +105℃				
Shock Test	500 m/sec², lasting for 11 ms				
Vibration Test	5 Hz ~2000 Hz, 3G rms				
IP Grade	IP 6K9K				
Dimensions	110*100.4*45 mm				
Weight	635 g				

1.4 Dimensions

There are 4 mounting holes and 2 positioning holes at the bottom of CLAIRLDR-L1 lidar. Four M4*10 (hexagon socket head cap screws) mechanical screws with spring washers and flat washers are needed for locking and fixing the lidar. See the outline dimension drawing shown in Figure 1.2.

Mounting requirements: (1) Mounting screws: M4*10, hexagon socket head cap screws; (2) Screws: GB70; (3) Spring washers: GB93; (4) Flat washers: GB93.1; (5) Electric Torque Screwdriver: 5NM.

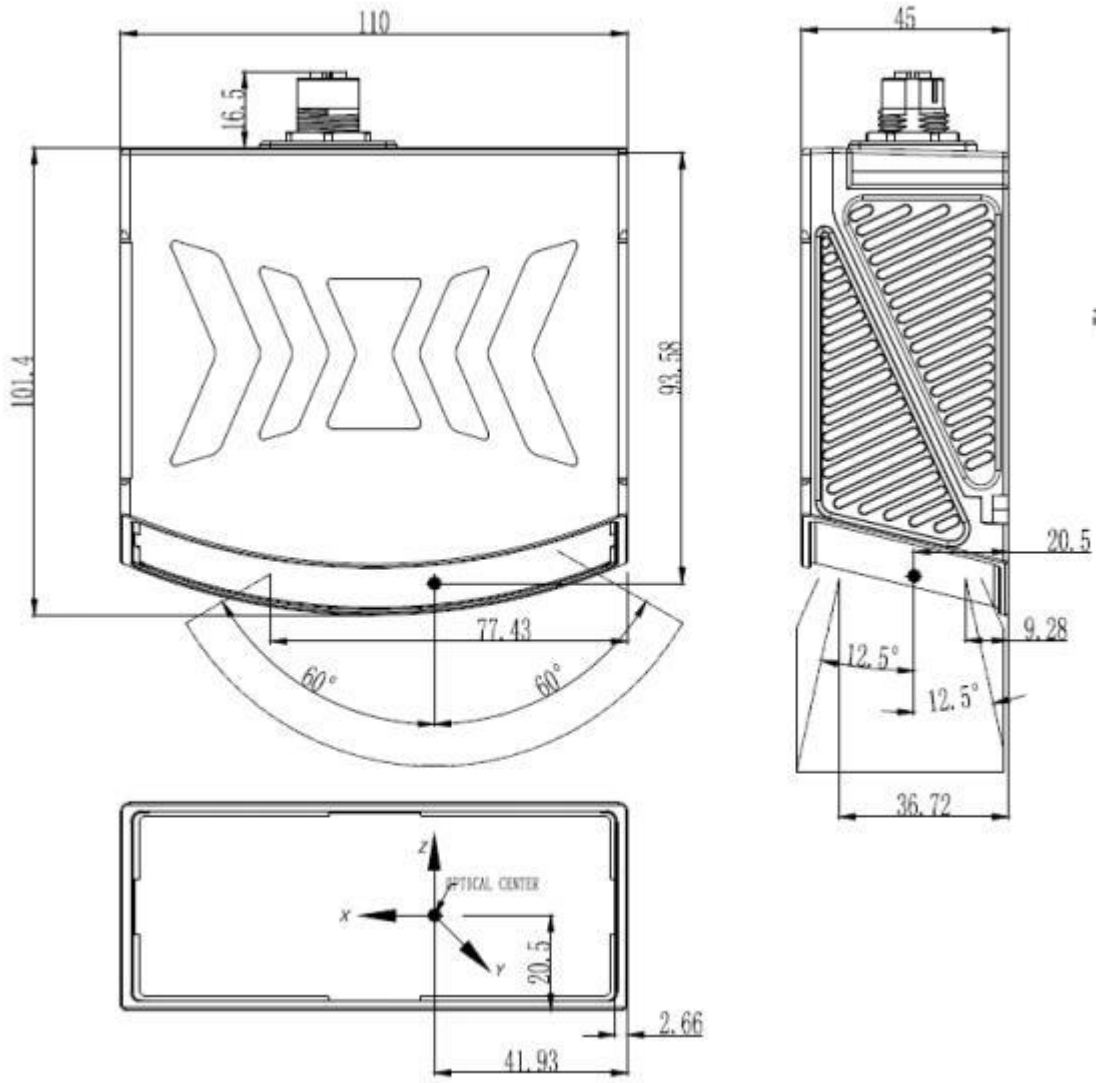

Figure 1.2 CLAIRLDR-L1 Lidar Dimension

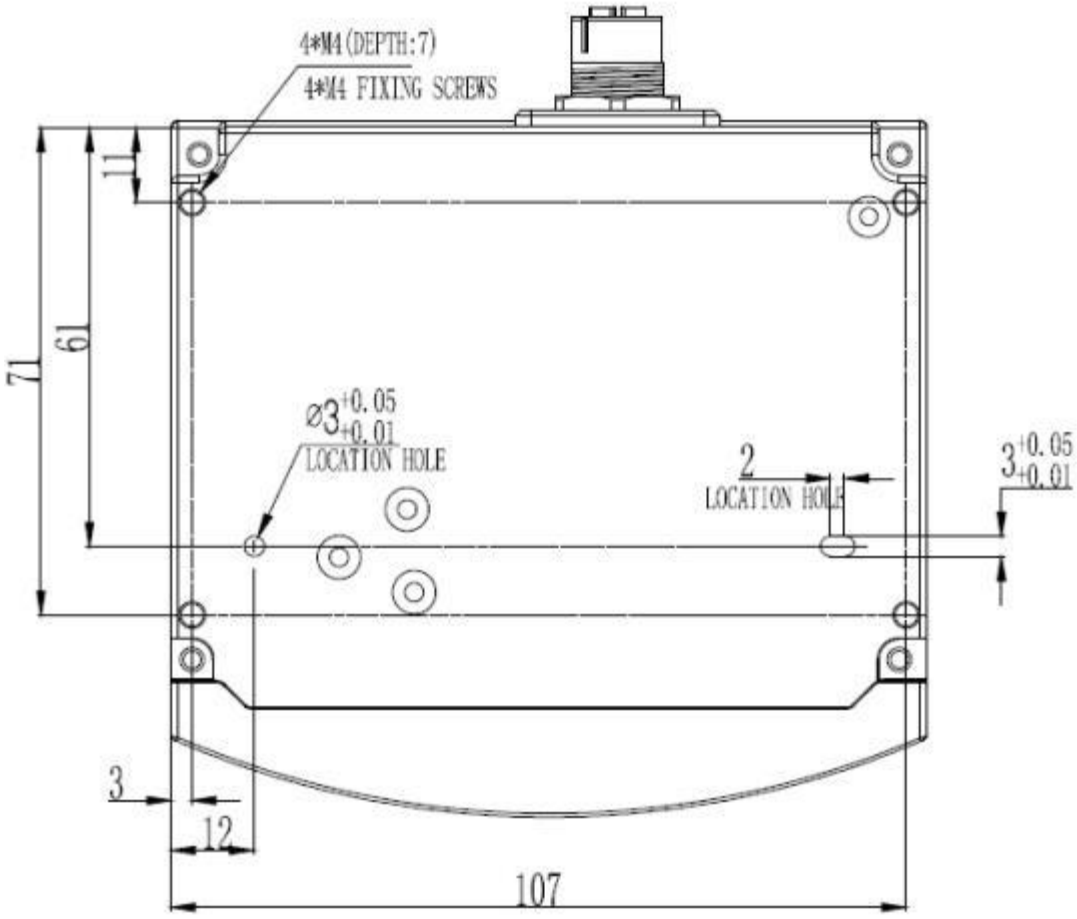

Figure 1.3 CLAIRLDR-L1 Mounting Dimensions

The CLAIRLDR-L1 lidar utilizes mirror rotation and special optical design to scan 120° horizontally. Figure 1.4 shows the optical center position, which is also the coordinate origin of the host computer display software.

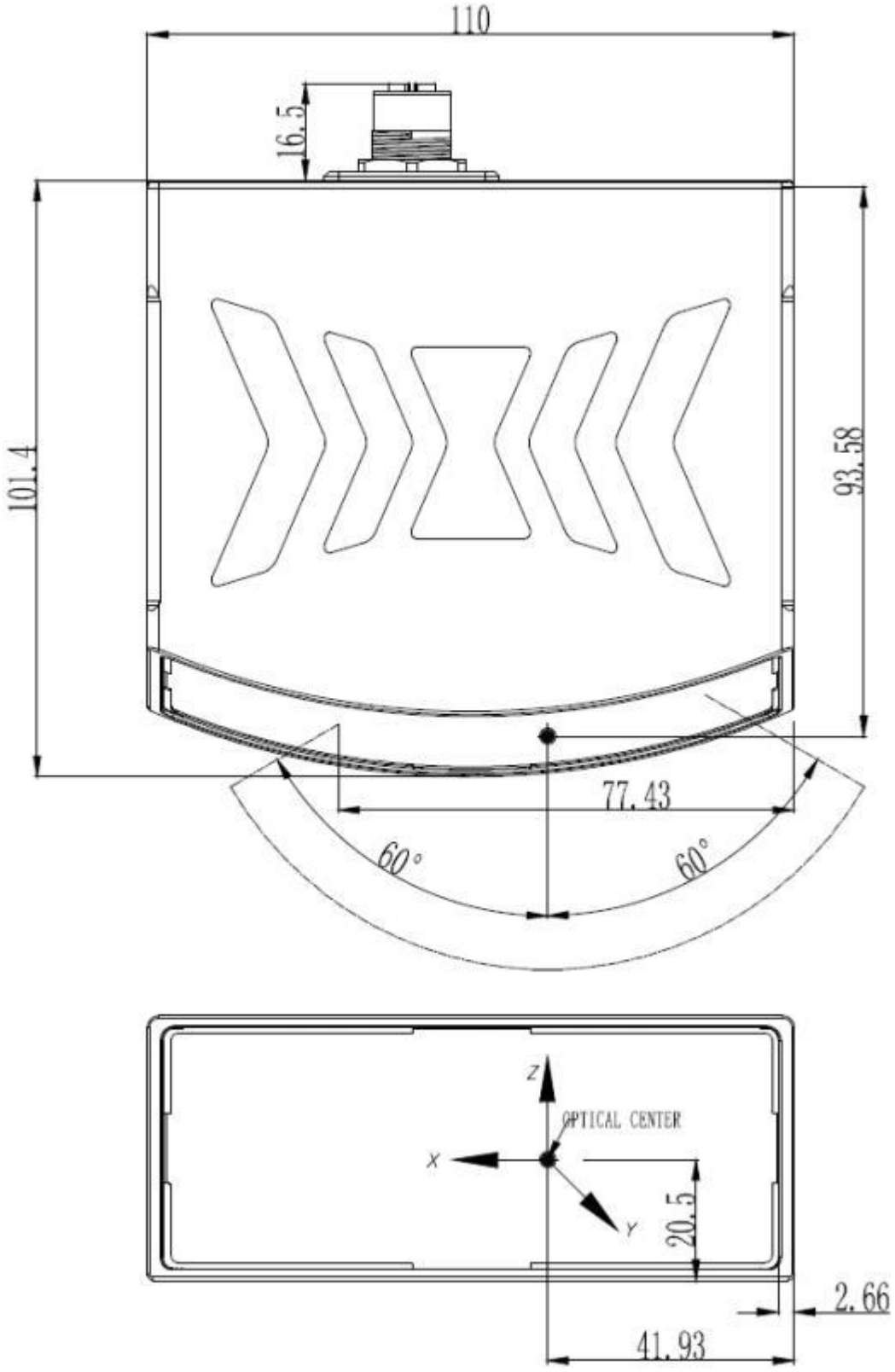

Figure 1.4 The Optical Center of the CLAIRLDR-L1

2. Electrical Interface

2.1 Power Supply

The power input range of the CLAIRLDR-L1 lidar is 9 V～32 VDC. If other DC power supply is adopted, the recommended output voltage of the power supply is 24 VDC. Please note that DC 9 Vand 32 V are short-term power supply in extreme environment, which cannot be used as working voltage. When the voltage output fluctuates, the lidar may not be able to work normally.

The maximum output current should be ≥2 A (the lidar requires a large instantaneous current when starting, and a small starting current may cause its failure to start normally). The output ripple noise should be <120 mVp-p and output voltage accuracy <5%.

The higher the power supply voltage and the stronger the discharge capacity, the more severe the impact on the lidar (such as powered by direct vehicle power supply without adapters and interface boxes). Therefore, it is necessary to use high-power TVS transient suppression diodes to protect the lidar to avoid damage.

The line length of the lidar power supply is 5~10 m, and the power supply voltage needs to be over 12 V but less than 32 V. If the line length is more than 10 m, then it is recommended to use a 220 VAC adapter nearby for power supply (DC long-distance power supply is not recommended).

2.2 Electrical Interface

There are 2 interfaces on the side of the CLAIRLDR-L1 lidar, one is the industrial Ethernet interface: M12 X CODE 8 PIN, model number from supplier: CNT PNA: L102-M12-Z08X09. The other interface is for power supply: M12 A CODE 12 PIN, model number from supplier: CNT PNA: L102-M12-Z12A23B. The definition of the interfaces is shown as below.

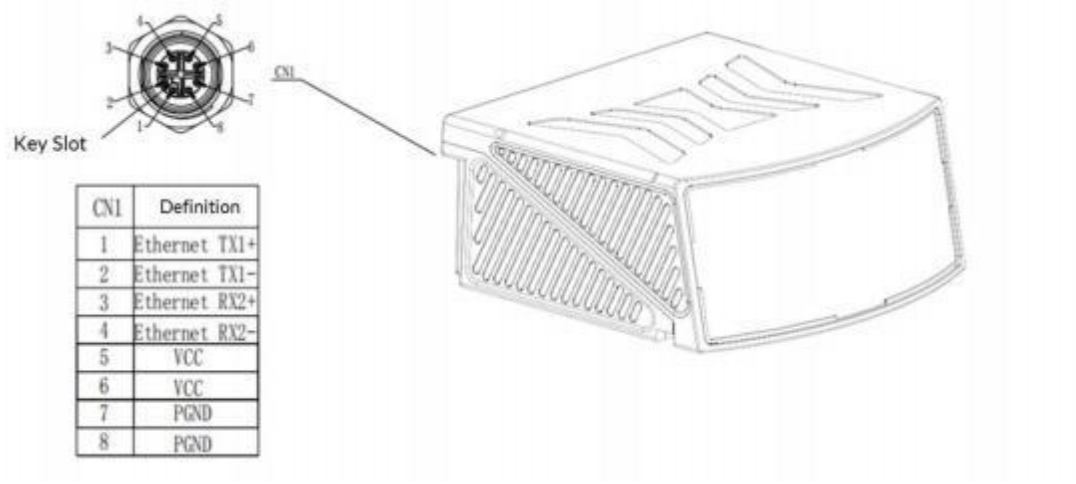

Figure 2.1 The Interface of CLAIRLDR-L1

The cable connecting to the CLAIRLDR-L1 lidar interface is one 2-in-1 power supply and Ethernet cable. As shown below.

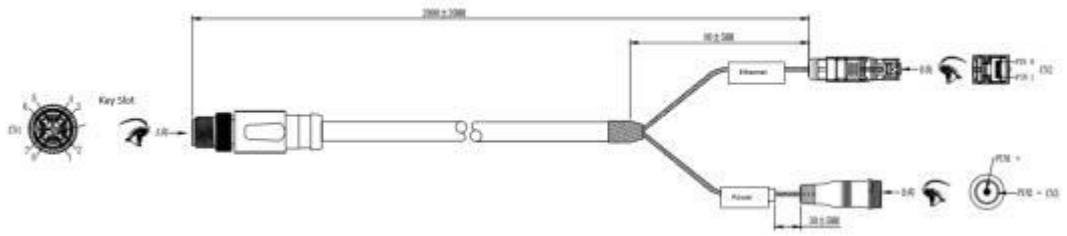

Figure 2.2 2-in-1 Power Supply and Ethernet cable Table 2.1 Wiring Definition of the Cable

CN1	Definition	Color	CN2	CN3
1	TD_P	Light Orange	1	/
2	TD_N	Orange	2	/
3	RD_P	Light Blue	3	/
4	RD_N	Blue	6	/
5	VCC	Red	/	1
6	VCC	Yellow	/	
7	GND	White	/	2
8	GND	Black	/	
Shell	PE	Braided Wire	Shell	/

3. Get Ready

3.1 Lidar Connection

To get ready for the lidar operation, please connect the lidar, host computer, and power supply. Also, please remove the protective film on the optical windows in case the detecting performance is influenced.

3.2 Software Preparation

The CLAIRLDR-L1 lidar can be operated under both Windows operating system and Linux operating system. Software needed is as follows:

Wireshark: to capture the ARP (Address Resolution Protocol) packets.

Note: Wireshark is a third-party software that you need to download by yourself. TraffiClair Technology bears no responsibility to any copyright and commercial disputes caused using this software.

To view the point cloud data generated by the lidar, you can either use the **Windows Client** or the **ROS Drive Program.**

Windows Client (optional): a host computer software to viewpoint cloud image under Windows operating system, which is also referred to as "point cloud display software".

- Software Acquisition

This CLAIRLDR-L1 Windows Client has been pre-stored in the USB flash drive provided along with the lidar. It can also be obtained from the sales or technical support personnel. No installation is required to the client.

- Operating Environment

This software can only run under the Windows x64 operating system at present. The computer configuration requirements for installing the software are: CPU: Intel(R) Core (TM) i5 or higher; Graphics Card: NVIDIA GeForce GTX750 or higher achieves the best effect, otherwise the display of the point cloud maybe affected. And the computer graphics card must support OpenGL 2 or higher graphics acceleration to display the point cloud normally.

- Supplemental Software

To use the Windows Client, the installation of the **WinPcap** third-party library

is necessary. This software has also been pre-stored in the USB flash drive provided with the lidar.

To install the WinPcap software, please follow the following steps: **Step 1.** Insert the USB driver into computer port and open it.

Step 2. Find the WinPcap installation file and double-click it to initiate the installation.

Step 3. Click “next” to enter the installation path selection interface. **Step 4.** Click “next” to enter the installation interface.

Step 5. Click the “install” button and wait for the installation to be completed.

ROS Drive Program (optional): to view the point cloud data under Linux operating system. This program has been pre-stored in the USB flash drive provided with the lidar. It can also be obtained from the sales or technical support personnel. No installation is required.

4. Usage Guide

This part states operation instructions of the Windows Client and ROS drive.

4.1 Operation Under Windows OS

4.1.1 Lidar Configuration

The default IP address and port number of the lidar network areas follows:

Table 4.1 Default Lidar Network Configuration

	IP Address	UDP Device Package Port	UDP Data Package Port
Lidar	192.168.1.200	2368 (Fixed)	2369 (Fixed)
Computer	192.168.1.102	2369	2368

Note:

The lidar IP (local IP) and the computer IP (destination IP) cannot be set to the same, otherwise the lidar will not work normally.

In the multicast mode, no two destination ports should be set to the same port number.

The lidar IP range are forbidden to be set to

1) Class D IP address (multicast address: i.e. 224.0.0.0~ 239.255.255.255)

2) Class E IP address (reserved address: i.e. 240.0.0.0~ 255.255.255.254)

3) Broadcast address (i.e. 255.255.255.255 and xx.x.255 for each network segment)

4) Special class IP address (0.x.xx and 127.xxx)

The lidar destination IP are forbidden to be set to

1) Class E IP address (i.e. 240.0.0.0 to 255.255.255.254)

2) Special class address (0.x.xx and 127.x.x.x)

When connecting to the lidar, if the computer IP and the lidar IP are in different network segments, you need to set the gateway; if they are in the same network segment, you only need to set different IPs, for example: 192.168.1.x, and the subnet mask is 255.255.255.0. If you need to find the Ethernet configuration information of the lidar, please connect the lidar to the computer and use “Wireshark” to capture the ARP packet of the device

for analysis. For the feature identification of the ARP packet, see the figure below.

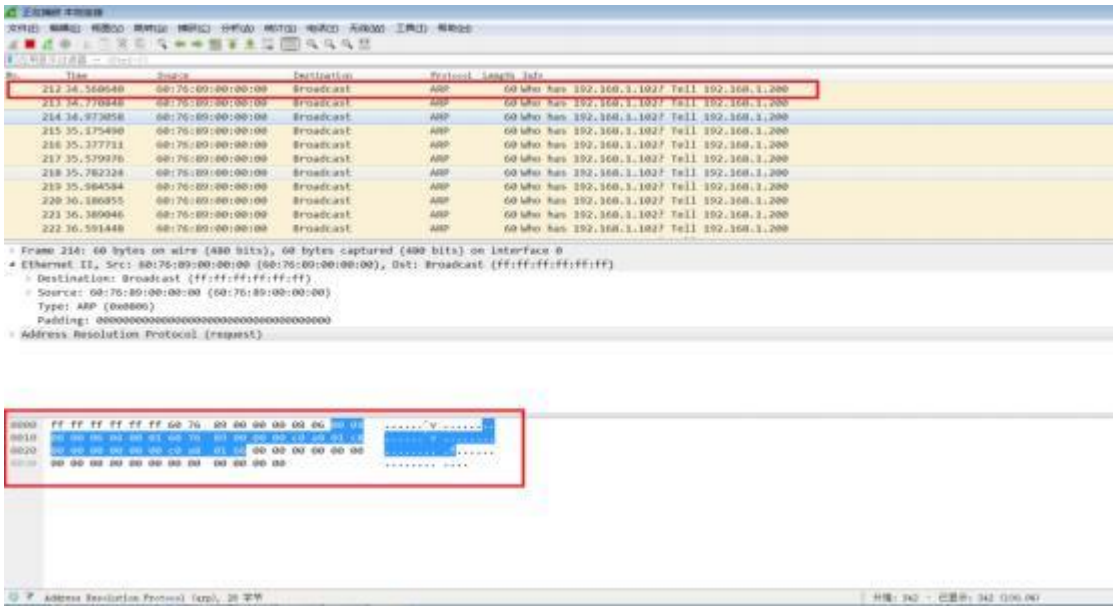

Figure 4.1 Wireshark captures APR packets

4.1.2 CLAIRLDR-L1 Windows Client Interface

The software interface includes menu area, tool bar area, 3D window area, data table area, etc.

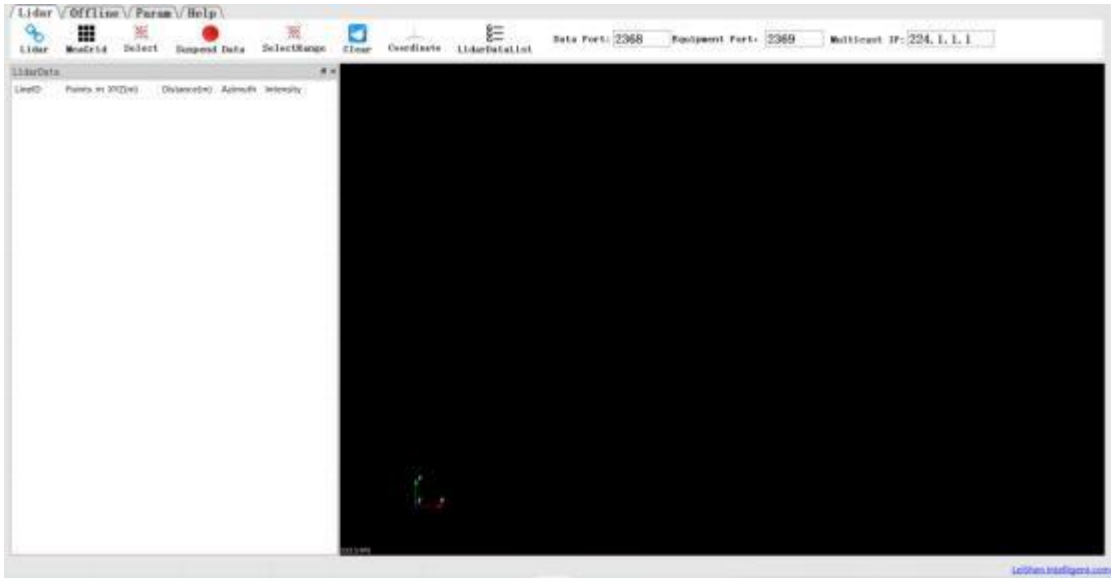

Figure 4.2 Initial Interface

Note: In the point cloud display area (right side), with 20 circles and 40*40 grids, the radius of each two adjacent circles differs by 10 m. The difference between each two grids (horizontal or longitudinal) is 10 m. And the radius of the outermost circle is 200 m.

The grids and circles make it easy to view the position of the point cloud.

The direction of the coordinate axis in the 3D display interface is consistent with the direction of the X-Y axis in the point cloud reference system.

Note: To view the software version, click “Help->About” in the tool bar. Point cloud display interface supports the following operations:

1) Zoom in/out the display interface with the mouse wheel; hold the right mouse button and drag it up/down to zoom in/out.

2) Hold the left mouse button and drag it to adjust the angle of view.

3) Hold the mouse wheel and drag it to pan the display interface; or hold the shift key on the keyboard and the left mouse button to pan the interface.

Menu button function introduction

- Lidar Menu

Button	Description
	Click to start receiving display data
	Show/hide measurement grid
	Mark the selected points in the point cloud image
	Pause point cloud image and data generating
	Select point clouds from different angles
	Clear screen
	Show/hide coordinate
	Show/hide the column on the left
	Three-view option: set the observation angle from top, front, and left. 

- Offline Menu

Button	Description
	Open offline data
	Record and save data, valid only when lidar receives data in realtime
	Skip to the beginning

	When paused, view the previous frame. When playing, rewind (click multiple times to select 2x, 3x, 1/2x, 1/4x and 1x speed)	
	Click to start playing after the point cloud file is loaded When playing, click to pause	
	When paused, view the next frame. When playing, fast forward (click multiple times to select 2x, 3x, 1/2x, 1/4x and 1x speed)	
	Skip to the end	
	Drag the progress bar or enter the frame number to skip to the specified position	

- Parameter Menu

Button	Description	
	Open lidar parameter form	The upper part of the form shows the lidar configuration. The parameters include local IP, destination IP, subnet mask, gateway, data port, device port, and motor speed setting, whether to obtain the local time, Mac address information, and device packet sending interval. The lower part shows the real-time status information. According to the DIFOP status packet sent out regularly by the lidar, the current status information is displayed.

	Select laser channel	Vertical Angle column represents the vertical angle of the corresponding channel data; Channel column represents the data sequence number corresponding to the channel; Laser ID represents the channel number of the lidar.
	Save the data in .csv format	The data includes Points_X, Points, Points_Z, Laser_id, Azimuth, Distance, Intensity.
	Set the mode of echo	Dual echo, strongest echo, second echo
	Set the display mode of the point cloud	Intensity, laser ID, azimuth angle, etc.

Note: The computer graphics card must support OpenGL 2 or higher graphics acceleration to display the point cloud normally.

4.1.3 Operation Procedure

Step 1. Set the data port number (default 2368), device port (or telemetry port in the picture below) number (default 2369).



Step 2. When the power supply of the lidar is connected to the network cable,

click  to receive the lidardata in realtime.

Step 3. The data table contains PointID, Points_m_XYZ, Azimuth, Distance, Intensity, Laser_id, timestamp, in which PointID is the point number; Points_m_XYZ are the coordinates; Azimuth is the azimuth angle; Distance is the distance value; Intensity is the reflection intensity; Laser_id is the lidar channel number and timestamp is the timestamp value.

4.1.4 Point Cloud Data Parsing

If you need to parse lidardata, please follow the steps below:

Step 1. Parse the data package to obtain the relative horizontal angle, ranging information, intensity data and nanosecond timestamp information of each laser.

Step 2. Read the device package to obtain information such as the horizontal correction angle value, UTC time and the current configuration of the device.

Step 3. Obtain the vertical angle of each line according to the laser beam distribution.

Step 4. According to the distance measurement value, vertical angle and the calculated horizontal angle of the point cloud data, the XYZ coordinate values are obtained.

Step 5. If necessary, calculate the precise time of the point cloud data through UTC time, nanosecond timestamp, light-emitting time of each laser, as well as single and dual echo modes.

Step 6. Reconfigure information such as Ethernet, PPS synchronization horizontal angle, motor speed and other information as needed, and pack the configuration package protocol.

4.1.5 Note

Notice about the lidar setting and usage:

1) It is not possible to use Windows Client to receive data in two processes (open twice at the same time) in the same computer. The port occupancy of the PC is generally exclusive, so the other software that uses the same process or the same port number cannot work normally after a process is bound to a specified port number. When Windows Client detects that the port is occupied, it will prompt that the communication network port configuration has failed, and automatically close the software. You need to close the software process that occupied the port and reopen the Windows.

Client to use it normally.

2) At the sametime, since Qt is adopted in the low-level software development, please create English paths when naming files and path folders.

3) Since the port number of the CLAIRLDR-L1 lidar can be modified through user configuration, and the lidar sends data to the host computer through the preset destination IP and port. Therefore, when the local laptop or desktop computer and other devices are receiving data, their IP address should be the same as the destination IP, and the port bound to the local host computer program needs to be the same as the destination port number, as shown in the figure below (these are the data packet parameters captured and analyzed by Wireshark software). The data in the red boxes indicate the destination IP and port number of the lidar.

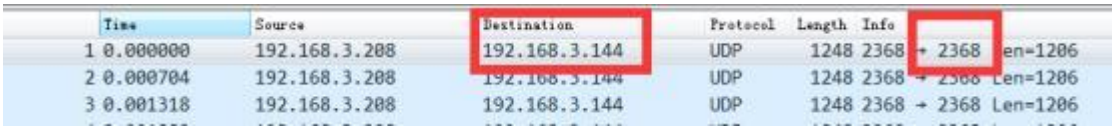

Figure 4.3 Data Packet Parameters Captured by Wireshark Software Please set the host computer IP according to the following steps:

Step 1. In the Control Panel -> Network and Internet -> Network Sharing Center, click the "local connection" button.

Step 2. Click "Properties" in the pop-up status box, and click "TCP/IPv4 protocol" in the pop-up properties box, as shown in the figure below.

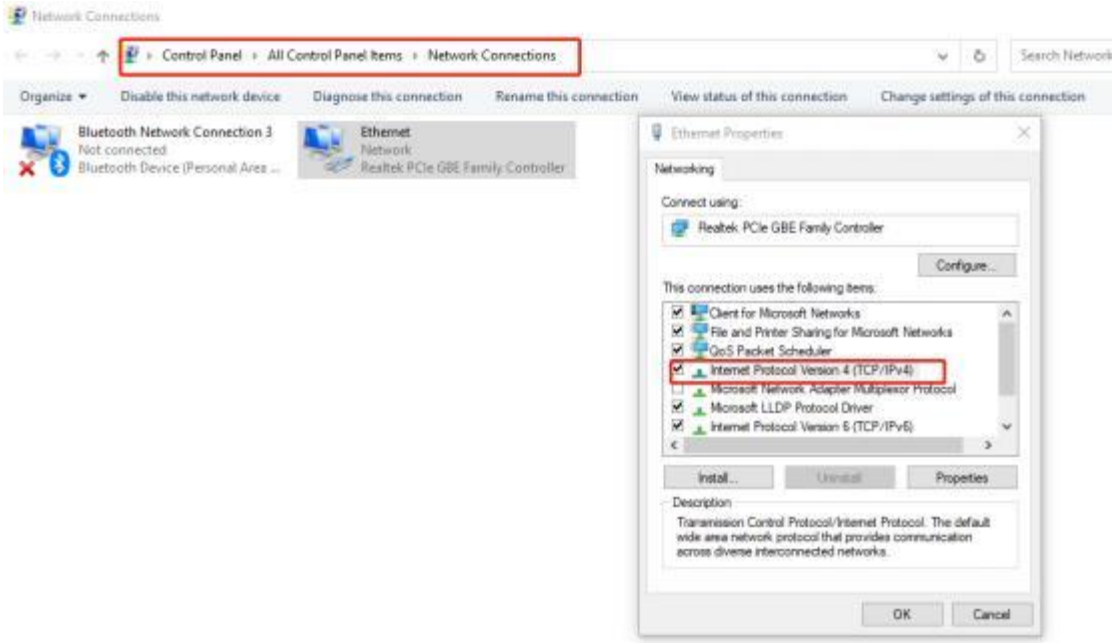

Figure 4.4 Network Connections

Step 3. In the TCP/IPv4 property settings, set the IP address to the lidar's destination IP (The default destination IP of the lidaris 192.168.1.102), and the subnet mask is set to 255.255.255.0.



Figure 4.5 IP Address and Subnet Mask Setting

4) Since the lidar display software needs to obtain a large number of data packets through the network in a short time, it maybe considered as a malicious program by the network firewall and be prohibited. Therefore, there may be situations in which the data packet has been sent to the computer by the Wireshark software, but the point cloud display software cannot display it. To address this problem, in Control Panel -> System and Security -> Windows Firewall Settings, click to allow this program to pass through Windows Firewall, setting steps areas shown in the figures below:

Step 1. In Control Panel -> System and Security -> Windows Defender Firewall, click “Allow an app or feature through the Windows Defender Firewall”.

Step 2. Browse to find the software installation path, select it and click OK.

Step 3. Tick the part marked in the red box according to the nature of your network,and click OK to see the data.

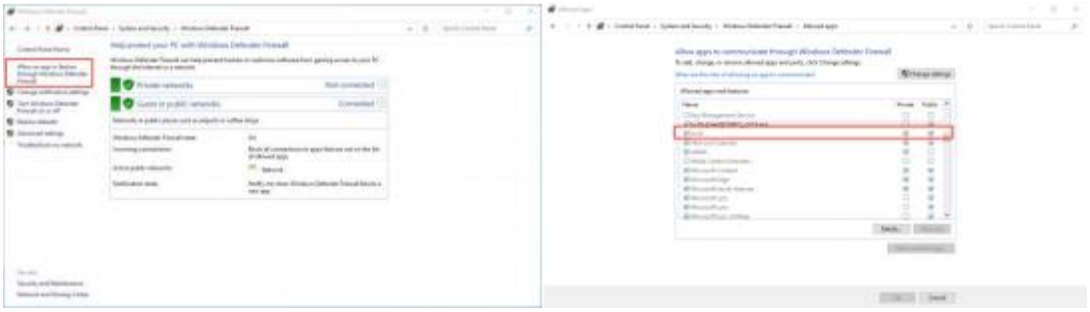

Figure 4.6 Windows Defender Firewall Setting

Computer graphics settings

When installing the lidar display software on a desktop or laptop with dual graphics cards, the default global settings of the computer operating system is to use the global settings (automatic selection: integrated graphics), which affects the display efficiency of the software. In order to ensure the use and display efficiency of the software, you need to manually set the computer graphics.

The condition of dual graphics cards can be checked in the computer configuration, and the condition of the display adapter can be seen in My Computer->Properties->Device Manager.

Take a laptop with Intel(R)HD Graphics 530 integrated graphics and NVIDIA GeForce GTX 960 discrete graphics as an example. The setting steps to manually switch the applicable graphics card of the software to high-performance discrete graphics card areas follows:

Step 1. Right-click on a blank space on the desktop to popup a right-click menu and select "NVIDIA Control Panel".

Step 2. Select the "Manage 3D Settings" in the NVIDIA Control Panel interface.

Step 3. Click the "Program Settings" button in the Manage 3D Settings interface.

Step 4. Click the "Add" button on the Manage 3D Settings interface.

Step 5. Click the "Browse" button in the pop-up interface.

Step 6. Find the application file (.exe file) of the software according to its installation path in the pop-up browsing interface.

Step 7. Click "OK" to automatically return to the NVIDIA control panel, select the high-performance NVIDIA processor in the combo box of the preferred graphics processor for this program in Option -2., and click "Apply" in the lower right corner.

After the computer application is set, close the NVIDIA Control Panel to complete the setting.

4.2 ROS Driver Operation Under Linux OS

4.2.1 Hardware Connection and Test

Step 1. Connect the lidar to the internet and power supply.

Step 2. Set the computer wired IP according to the destination IP of the lidar, (whether the computer wired IP is set successfully can be checked by the ifconfig command, as shown in the figure, the destination IP is 192.168.1.102)

```
ls@lidar:~$ ifconfig
enp3s0: flags=4163<UP,BROADCAST,RUNNING,MULTICAST>  mtu 1500
        inet 192.168.1.102  netmask 255.255.255.0  broadcast 192.168.1.255
        inet6 fe80::8f7d:d4f9:2c6a:850d  prefixlen 64  scopeid 0x20<link>
        ether f0:2f:74:a1:99:53  txqueuelen 1000  (以太网)
        RX packets 377598  bytes 78074323 (78.0 MB)
        RX errors 0  dropped 1272  overruns 0  frame 0
        TX packets 958224  bytes 1418001117 (1.4 GB)
        TX errors 0  dropped 0 overruns 0  carrier 0  collisions 0
```

Figure 4.7 ifconfig Command Feedback

Note: The default destination IP of the lidaris 192.168.1.102, and the computer must be configured according to the actual lidar destination IP. After setting the IP for the first time, please restart the lidar.

Step 3. After the lidar is powered on and restarted, check the wired connection icon of the computer to see whether it is connected properly.

Step 4. Open the terminal: ping the lidar IP, and test whether the hardware is connected normally. If the ping is successful, then the data is received, otherwise check the hardware connection.

Step 5. Use “sudo tcpdump -n -i eth0” (here eth0 is the name of the wired network device, see the device name of ifconfig wired connection display for details) to view the data packets sent by the lidar (as shown in the figure, there are 1212-byte data packets sent by the lidar to the destination, which means that the lidar data is sent normally).

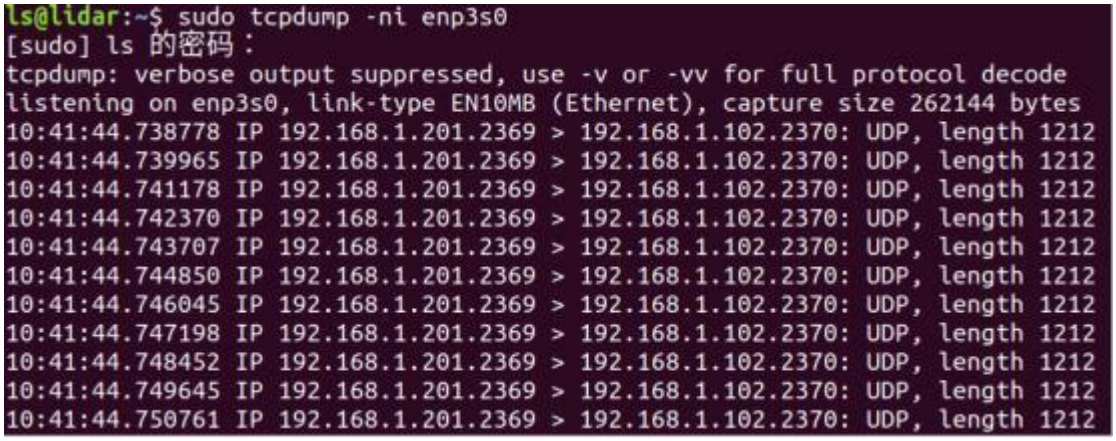

Figure 4.8 sudo tcpdump -n -i eth0 Command Feedback

4.2.2 Software Operation Example

Note: The following instructions are for reference only. Please refer to the README file of the ROS drive bag in the customer service pack for details.

Step 1. Establish a workspace and build a compilation environment mkdir -p ~/trafficlair_ws/src

cd ~/trafficlair_ws

Note: The workspace can be named arbitrarily. For example, "trafficlair_ws" can be changed to any name.

Step 2. Download the lidardriver and dependency package.

The driver and dependency package can also be obtained directly from our website or customer service. Copy the obtained driver file to the newly created workspace "trafficlair_ws/src" and use the "tar –xvf" command to decompress it.

Step 3. Compile and package cd ~/trafficlair_ws

catkin_make.

Step 4. Run the program.

source ~/trafficlair_ws /devel/setup.bash

roslaunch lslidar_ch_decoder lslidar_ch. launch

Reopen aterminal again and execute the following command: rosrun rviz rviz

Note 1): If the lidar destination port and motor speed are modified, please open "lslidar_ch. launch" to modify the configuration accordingly. The default data packet port is 2368, device packet port is 2369, IP address is 192.168.1.200.

Note 2): If timeout appears, it means that the driver has no data reception. Please check the hardware connection.

Note 3): If steps 1, 2, and 3 have been completed, next time after the "Displays Window" is reopened, start directly from step 4.

Step 5. Display the data detected by the lidar.

In the "Displays Window" that pops up, modify the value of "Fixed Frame" to "laser_link". Click the "Add" button at the same time and click "PointCloud2" under "By topic" to add a multi-line point cloud node.

5. Communication Protocol

Lidar data output and configuration use Gigabit Ethernet UDP/IP communication protocol. There are 3 UDP packet protocols, among which MSOP packet length is 1254 bytes (42 bytes Ethernet header and 1212 bytes payload). DIFOP and UCWP are 1248 bytes (42 bytes Ethernet header and 1206 bytes payload) Lidar supports unicast, broadcast and multicast communication.

The communication protocols of the lidarare:

Main data Stream Output Protocol (MSOP): outputting the distance, angle, intensity and other information measured by the lidar.

Device Information Output Protocol (DIFOP): outputting the current status of lidar and accessory equipment and various configuration information.

User Configuration Write Protocol (UCWP): setting the configuration parameters of the lidar.

Table 5.1 UDP Packet Protocol

Protocol Name	Abbr.	Function	Length	Transmission Interval
Main data Stream Output Protocol	MSOP	Outputting measured data and timestamp	1254 bytes	about 0.074 ms;
Device Information Output Protocol	DIFOP	Outputting parameter configuration and status information	1248 bytes	1s (for 1 packet)
User Configuration Write Protocol	UCWP	Inputting user configured device parameters	1248 bytes	Not Fixed

5.1 MSOP Protocol

The data package outputs measured data such as the angle value, distance value, intensity value, and timestamp of the point cloud. The data of the package adopts Big-Endian mode.

The data package includes a 42-byte Ethernet header and a 1212-byte payload, with a total length of 1254 bytes.

Single echo mode: The payload consists of 1197 bytes of point cloud data and 15 bytes of additional information (including 3 bytes reserved, 6 bytes of UTC time of year, month, day, hour, minute and second, 4 bytes of Timestamp and 2 bytes of Factory).

Dual echo mode: The payload consists of 1199 bytes of point cloud data and 13 bytes of additional information (including 1 byte reserved, 6 bytes of UTC time of year, month, day, hour, minute and second, 4 bytes of Timestamp and 2 bytesof Factory).

5.1.1 Format

The CLAIRLDR-L1 lidar supports single echo mode which measures the most recent echo value and dual echo mode which measures the most recent and second recent echo values.

Single Echo Mode

Each MSOP data packet contains 1212 bytes of data. Each packet of data contains 171 points, that is, 171*7=1197 bytes, and the frame tail is 15 bytes (including 3 bytes reserved, 6 bytes of UTC time of year, month, day, hour, minute and second, 4 bytes of Timestamp and 2 bytes of Factory). See the table below:

Header (42 bytes)
Measure point 1
Measure point 2
Measure point 3
……
Measure point 171
Reserved (3 bytes)

UTC Time (6 bytes)	Timestamp (4 bytes)	Factory (2 bytes)

Note: The lidar displays the point cloud image by frame. In the MSOP data package, if the data of the first point is FF AA BB CC DD EE 11, then it is the start mark of the point cloud frame (the lidar scans to the far right at this time). The start mark can be anywhere in a packet of data, not necessarily the packet header. This point is not displayed as point cloud data but is only a judgment mark for the beginning of an image frame.

Dual Echo Mode

Each MSOP data packet contains 1212 bytes of data. Each packet of data contains 109 points, that is, 109*11=1199 bytes, and the frame tail is 13 bytes (including 1 byte reserved, 6 bytes of UTC time of year, month, day, hour, minute and second, 4 bytes of Timestamp and 2 bytes of Factory). See the table below:

Header (42 bytes)		
Measure point 1		
Measure point 2		
Measure point 3		
……		
Measure point 109		
Reserved (1 byte)		
UTC Time (6 bytes)	Timestamp (4 bytes)	Factory (2 bytes)

Note: The lidar displays the point cloud image by frame. In the MSOP data package, if the data of the first point is FF AA BB CC DD EE 11 22 33 44 55, then it is the start mark of the point cloud frame (the lidar scans to the far right at this time). The start mark can be anywhere in a packet of data, not necessarily the packet header. This point is not displayed as point cloud data but is only a judgment mark for the beginning of an image frame.

5.1.2 Data Package Parameter Description

Ethernet Header

The Ethernet header has a total of 42 bytes, as shown in the table below.

Ethernet Header: 42 Bytes				
Name	S/N	Information	Offset	Length (byte)
Ethernet II MAC	0	Destination	0	6
	1	Source	6	6
Ethernet Packet Type	2	Type	12	2
Internet Protocol	3	Version, Header Length, Differentiated Services, Field, Total Length, Identification, Flags, Fragment Offset, Time to Live, Protocol, Header, Checksum, Source IP Address, Destination IP Address	14	20
UDP Port Number	4	Lidar Port (0x0941, represent 2369)	34	2
	5	Computer Port (0x0940, represent 2368)	36	2
UDP Length & Sum Check	6	Length (0x04BE, represent 1214 bytes)	38	2
	7	Sum Check	40	2

Subframe (Single Echo Mode)

The subframe is the effective data area of the data packet, which contains a total of 1197 bytes, including 171 points, that is, 171*7=1197 bytes. Take the first measure point as an example:

Byte 1	Byte 2	Byte 3	Byte 4	Byte 5	Byte 6	Byte 7
Line_num	Horizontal angle[15:8]	Horizontal angle[7:0]	Distance[23:16]	Distance[15:8]	Distance[7:0]	strength

Byte 1 represents the line number, which is 0x00 by default.

Byte 2 and **Byte 3** represent the horizontal angle, whose data are stored in Big- Endian mode. The unit is 0.01 degrees. For example, 0x11AD=4525, that is 45.25°.

Byte 4, **Byte 5**, and **Byte 6** represent the distance value. Their data arestored in Big-Endian mode. The two high bytes are the integer part, whose unit is "cm"; and the last byte is the decimal part, whose unit is 1/256 cm. To analyze the distance value, for example: the distance value in the obtained data packet is represented by the hexadecimal number 0x02,0x18,0x32, and the first two bytes are composed of 16-bit unsigned data, that is: 0x0218, which is converted to decimal distance value: 536 cm. The last byte is the decimal part, 0x32 equals 50 in decimal, that is, 50*1/256 cm=0.1953125 cm. Then the two parts add up to 536. 1953125 cm.

Byte 7 represents echo strength, and the value range is 0-255. (Echo strength can reflect the energy reflection characteristics of the measured object in the actual measurement environment. Therefore, the echo strength can be used to distinguish objects with different reflection characteristics.)

Subframe (Dual Echo Mode)

The subframe is the effective data area of the data packet, which contains a total of 1199 bytes, including 109 points, that is, 109*11=1199 bytes. Take the first measure point as an example:

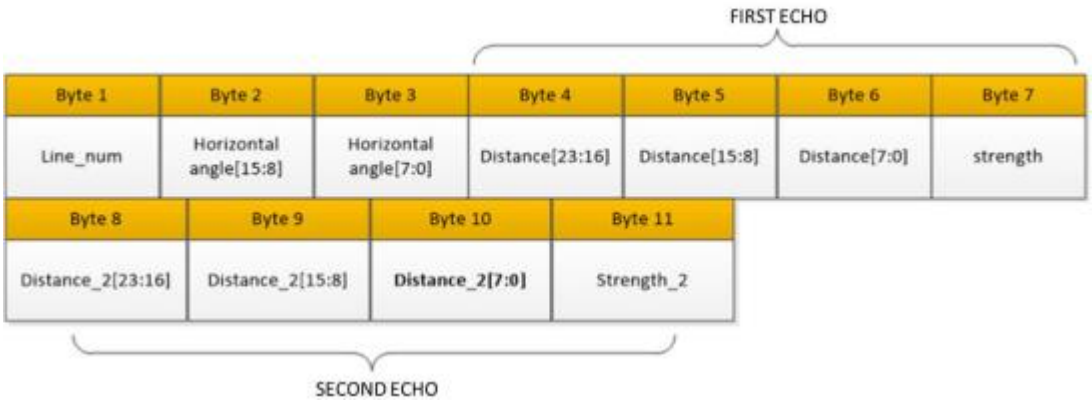

Byte 1 represents the line number, which is 0x00 by default.

Byte 2 and **Byte 3** represent the horizontal angle, whose data are stored in

Big- Endian mode. The unit is 0.01 degrees. For example, 0x11AD=4525, that is 45.25°.

Byte 4, **Byte 5**, and **Byte 6** represent the the first echo distance value. Their data are stored in Big-Endian mode. The two high bytes are the integer part, whose unit is "cm"; and the last byte is the decimal part, whose unit is 1/256 cm. To analyze the distance value, for example: the distance value in the obtained data packet is represented by the hexadecimal number 0x02,0x18,0x32, and the first two bytes are composed of 16-bit unsigned data, that is: 0x0218, which is converted to decimal distance value: 536 cm. The last byte is the decimal part, 0x32 equals 50 in decimal, that is, 50*1/256 cm=0.1953125 cm. Then the two parts add up to 536. 1953125 cm.

Byte 7 represents the first echo strength, and the value range is 0-255. (Echo strength can reflect the energy reflection characteristics of the measured object in the actual measurement environment. Therefore, the echo strength can be used to distinguish objects with different reflection characteristics.)

Byte 8, Byte 9 and Byte 10 represent the second echo distance value. Their data are stored in Big-Endian mode. The two high bytes are the integer part, whose unit is "cm"; and the last byte is the decimal part, whose unit is 1/256 cm. The distance value analysis method is the same as the first echo.

Byte 11 represents the second echo strength, and the value range is 0-255. (Echo strength can reflect the energy reflection characteristics of the measured object in the actual measurement environment. Therefore, the echo strength can be used to distinguish objects with different reflection characteristics.)

Azimuth

The resolution of the horizontal angle value is determined according to the motor speed. The horizontal angle defines the right side of the lidar as 0°, the left side as 180°, and the vertical direction as 90°. The range of the lidar's horizontal direction is 30° to 150°, as shown in the figure below.

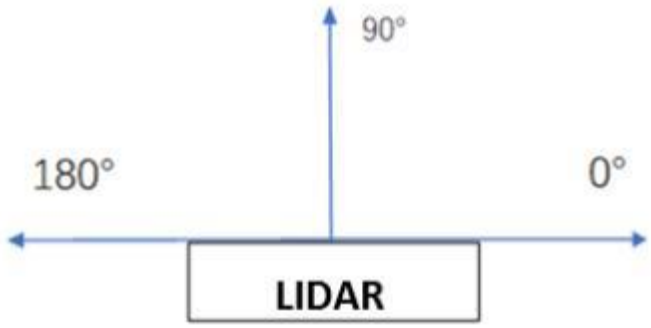

Figure 5.1 The Azimuth of the Lidar

Additional Information

The additional information of the single echo mode is 15 bytes in length, including 3 bytes reserved, 6 bytes of UTC time of year, month, day, hour, minute and second, 4 bytes of Timestamp and 2 bytes of Factory.

Additional Information (single echo mode): 15 bytes			
Name		Length (byte)	Function
Reserved		3	Reserved
UTC time		6	Year, month, day, hour, minute and second of the UTC time
Timestamp		4	Timestamp (ns)
Factory	Vendor Information	1	0x7D represents the CLAIRLDR-L1 lidar
	Echo Information	1	0x1 represents single echo lidar 0x2 represents dual echo lidar

The additional information of the dual echo mode is 13 bytes in length, including 1 byte reserved, 6 bytes of UTC time of year, month, day, hour, minute and second, 4 bytes of Timestamp and 2 bytes of Factory.

Additional Information (dual echo mode): 13 bytes

Name		Length (byte)	Function
Reserved		1	Reserved
UTC time		6	Year, month, day, hour, minute and second of the UTC time
Timestamp		4	Timestamp (ns)
Factory	Vendor Information	1	0x7D represents the CLAIRLDR-L1 lidar
	Echo Information	1	0x1 represents single echo lidar 0x2 represents dual echo lidar

1) When there is an external synchronization device inputting PPS signal, the timestamp is generated according to the external synchronization PPS time as the cycle time, and the range of the timestamp is 0-999,999,999 (ns);

2) When there is no synchronization device inputting PPS signal, the lidar generates timestamp with a period of 1 second. The range of the timestamp is 0-999,999,999 (ns).

5.2 DIFOP Protocol

The device package outputs read-only parameters and status information such as version number, Ethernet configuration, motor speed and operating status, and fault diagnosis. The data of the device package adopts Big-Endian mode.

The device package includes a 42-byte Ethernet header and a 1206-byte payload, with a length of 1248 bytes. The payload is composed of an 8-byte frame header, 1196-byte data and a 2-byte frame tail.

Figure 5.2 Data Format of the Device Package

No.	Information	Offset	Length (Byte)	Note
0	DIFOP	0	8	a5 ff 00 5a 11 11

	Identification Header			55 55
1	Motor Speed	8	2	0x00: rotating; 0x01: stopped
2	Ethernet Configuration (IP, MAC, port, NTP)	10	22	
3	Ethernet Configuration (gateway, subnet mask)	32	8	
4	Lidar Rotation/ Stationary	40	2	
5	Device Flow Packet Interval	42	2	
6	Clock Source Selection	44	1	
7	Standby Mode	45	1	0: normal operation; 1: standby mode
8	Phase Lock Enable	46	1	0: disabled; 1: enable
9	Phase Lock Angle Setting	47	2	The value is multiplied by 100 to write into the lidar; divide the value by 100 to read back
10	Reserved	49	2	
11	Reserved	51	1	
12	UTC Time	52	6	

13	Latitude and Longitude	58	22	
14	Left APD Board Temperature	80	2	temp=(data/4096) *2.5*100-50
15	Left LD Board Temperature	82	2	temp=(data/4096) *2.5*100-50
16	Left APD High Voltage	84	2	HV=281-0.0692142*data
17	Right APD Board Temperature	86	2	temp=(data/4096) *2.5*100-50
18	Right LD Board Temperature	88	2	temp=(data/4096) *2.5*100-50
19	Right APD High Voltage	90	2	HV=281-0.0692142*data
20	GPS Status (this CLAIRLDR-L1 doesn'tsupport GPS timing)	92	1	
21	PPS Status	93	1	
22	High Temperature Pause	94	2	
23	Cover Dirty Count	96	1	
24	Cover Dirty Alarm Message	97	1	
25	Cover Dirty Energy Value	98	2	
26	Left Threshold Adjustment Value	100	1	
27	Right Threshold Adjustment Value	101	1	
28	Power Board Temperature	102	2	temp=(data/4096) *2.5*100-50
29	Main Control Board	104	2	temp= (data*

	FPGA Temperature			503.975)/4096-273.15
30	Input Voltage	106	2	data / 100.0
31	12 V Voltage	108	2	data / 100.0
32	2.5 V Voltage	110	2	data / 100.0
33	1.8 V Voltage	112	2	data / 100.0
34	1.2 V Voltage	114	2	data / 100.0
35	Left Emitting Voltage	116	2	data / 100.0
36	Right Emitting Voltage	118	2	data / 100.0
37	Phase Lock Angle Offset	120	2	
38	Reserved	122	1	
39	Reserved	123	1081	
40	Tail	1204	2	0f, f0

Header is the device packet identification header, which is fixed as 0xA5,0xFF, 0x00,0x5A,0x11,0x11,0x55,0x55, and the first 4 bytes can be used as the packet inspection sequence. The tail is fixed as 0x0F,0xF0.

5.3 UCWP Protocol

The UCWP configures the lidar's Ethernet, motor speed and other parameters, and the data of the configuration package adopts the Big-Endian mode.

The configuration packet includes a 42-byte Ethernet header and a 1206-byte payload, with a length of 1248 bytes. The payload is composed of an 8-byte Header, 1196-byte Data, and a 2-byte Tail.

Note: It is recommended that you configure the lidar through the Windows point cloud display software. Please do not pack and configure the lidar parameters by yourself.

Figure 5.3 Data Format of the Configuration Package

No.	Information	Offset	Length (Byte)	Note
0	UCWP Identification Header	0	8	aa 00 ff 11 22 22 aaaa
1	Motor Speed	8	2	300, 600, 1200
2	Ethernet Configuration (IP, MAC, port, NTP)	10	22	
3	Ethernet Configuration (gateway, subnet mask)	32	8	
4	Lidar Rotation/ Stationary	40	2	0x00: rotating; 0x01: stopped (when rotating, the motor speed should be set)
5	Device Flow Packet Interval	42	2	
6	Clock Source Selection	44	1	
7	Standby Mode	45	1	0: normal; 1: standby mode
8	Phase Lock Enable	46	1	0: disabled; 1: enable
9	Phase Lock Angle Settings	47	2	The value is multiplied by 100 to write into the lidar; divide the value by 100 to read

				back
10	Reserved	49	1155	
11	Tail	1204	2	0f, f0

Header is the configuration packet identification header, which is fixed as 0xAA,0x00,0xFF,0x11,0x22,0x22,0xAA,0xAA, and the first 4 bytes are used as the packet inspection sequence. The Tail of the frame is fixed as 0x0F,0xF0.

5.3.1 Configuration Parameters and Status Description

Here below are the configuration parameters and status description of specific lidar information.

Motor Speed

Motor Speed (2 bytes)		
S/N	Byte 1	Byte 2
Function	Speed: 30 Hz/60 Hz/90 Hz/120 Hz/150 Hz	

The motor rotates clockwise. Five speeds can be set: when it is set to 0x0BB8, the speed is 3000 RPM; when it is set to 0x0960, the speed is 2400 RPM; when it is set to 0x0708, the speed is 1800 RPM; when it is set to 0x04B0, the speed is 1200 RPM; when it is set to 0x0258, the speed is 600 RPM. Other setting data is not supported.

Ethernet Configuration

The length of the source IP address “IP_SRC” is 4 bytes and the length of the destination IP address “IP_DEST” is also 4 bytes. Each lidar has a fixed MAC address “MAC_ADDR” (6 bytes in length), which cannot be configured. Port 1 is the UDP data port number and port 2 is the UDP device port number.

Ethernet Configuration (22 bytes)

S/N	Byte 1	Byte 2	Byte 3	Byte 4	Byte 5	Byte 6	Byte 7	Byte 8
Function	IP_SRC				IP_DEST			
S/N	Byte 9	Byte 10	Byte 11	Byte 12	Byte 13	Byte 14	Byte 15	Byte 16
Function	MAC_ADDR (Read Only)						Data Port: Port 1	
S/N	Byte 17	Byte 18	Byte 19	Byte 20	Byte 21	Byte 22		
Function	Device Port: Port 2		Reserved					

Lidar Rotation & Stationary

Lidar Rotation & Stationary (2 bytes)		
S/N	Byte 1	Byte 2

Function	0: Rotation；1: Stationary

0x0000 indicates that the lidaris rotating, and 0x0001 indicates that the lidaris stationary, and the default value of the lidaris rotating scan.

Device Flow Packet Interval

The interval is 1s (for 1 packet).

Clock SourceSelection

Clock SourceSelection (2 bytes)	
S/N	Byte 0
Function	0: GPS; 1: gPTP, the unit of GPS timestamp is ns and of gPTP timestamp is ns

Configure 0x00 to indicate GPS timing; configure 0x01 to indicate gPTP timing. Note: the CLAIRLDR-L1 lidar doesn't support GPS timing.

Standby Mode

Standby Mode (2 Bytes)	
S/N	Byte 0
Function	0 means normal mode; 1 means standby mode

Configure 0x00 to indicate normal mode; configure 0x01 to indicate standby mode, where the laser does not emit light.

Phase Lock Enable

Phase Lock Enable (2 Bytes)	
S/N	Byte 0
Function	0: not enabled; 1: enabled

Configure 0x00 to indicate that phase lock is not enabled; configure 0x01 to indicate that phase lock is enabled, and the phase lock function is activated.

Phase Lock Angle Setting

Phase Lock Angle Setting (2 Bytes)		
S/N	Byte 0	Byte 1
Function	Set phase lock angle	

Multiply the angular accuracy of 0.01° by 100 and then write it to the lidar. If the phase lock is at 100, then configure 10000, i.e. 0x2710 in hex. The lidar locks the motor around 100° when the phase lock is enabled.

UTC Time

The lidar receives GPS signals and parses the $GPRMC information. The UTC time synchronizes with GPS. If there is no GPS timing, UTC time is all 0s. The

GPS baud rate supported by the lidar is 9600. There are 8 data bits, 1 stop bit and no parity bit.

Note: the CLAIRLDR-L1 lidar doesn't support GPS timing.

UTC Time (6 bytes Read Only)						
S/N	Byte 1	Byte 2	Byte	Byte 4	Byte	Byte

			3		5	6
	Year	Month	Day	Hour	Minute	Second
Function	0~255 corresponding to the year 2000~2255	1~12 month	1~31 day	0~23 hour	0~59 min	0~59 sec

Latitude and Longitude

Latitude and Longitude (22 bytes Read Only)								
S/N	Byte 1	Byte 2	Byte 3	Byte 4	Byte 5	Byte 6	Byte 7	Byte 8
Function	Reserved	Latitude						
S/N	Byte 9	Byte 10	Byte 11	Byte 12	Byte 13	Byte 14	Byte 15	Byte 16
Function		Longitude						
S/N	Byte 17	Byte 18	Byte 19	Byte 20	Byte 21	Byte 22		
Function					N/S	W/E		

The latitude and longitude are output in the form of ASCII code.

5.3.2 Configuration Package Example

If you want to reset the lidar IPas 192.168.1.105, computer IP as 192.168.1.225, data port number as 6688, device port number as 8899,

motor speed as 1200 rpm, according to the definition of the UCWP Packet and each register, it can be reconfigured as follows:

Table 5.4 Configuration Package Example

Info	Content	Config	Length (byte)
Header		0xAA,0x00,0xFF,0x11,0x22,0x22,0xAA,0xAA	8
Motor Speed	1200 rpm	0x04,0xB0	2
Lidar IP (IP_SRC)	192.168.1.105	0xC0,0xA8,0x01,0x69	4
Computer IP (IP_DEST)	192.168.1.225	0xC0,0xA8,0x01,0xE1	4
Data Port (port 1)	6688	0x1A20	2
Device Port (port 2)	8899	0x22C3	2
Lidar Rotation / Stationary	Rotation	0x0000	2
Reserved	Reserved	0x00	1180
Tail		0x0F,0xF0	2

When using this protocol to configure the device, byte-level or section-level addressing and writing are not allowed, and the entire list must be written completely. After the list is written, the corresponding function will be updated and take effect immediately.

6. Time Synchronization

The way to synchronize the lidar and external equipment is gPTP time synchronization. If there is no external synchronization input, the lidar internally generates timing information.

Single echo mode: The absolute accurate time of the point cloud data is obtained by adding the 6-byte year, month, day, hour, minute, second information and the 4-byte timestamp (accurate to nanoseconds) of the data packet.

Dual echo mode: The absolute accurate time of the point cloud data is obtained by adding the 6-byte year, month, day, hour, minute, second information and the 4-byte timestamp (accurate to nanoseconds) of the data packet.

6.1 gPTP Synchronization

Generalized Precise Time Protocol (gPTP) is derived from Precise Time Protocol (PTP) and is used to synchronize the time of individual devices within a local area network with high precision.

This series of lidar supports gPTP timing synchronization. Before synchronizing the lidar via gPTP, the time source needs to be set to “PTP” in the lidar's point cloud display software. And the lidar should be connected to a gPTP master as shown in below.

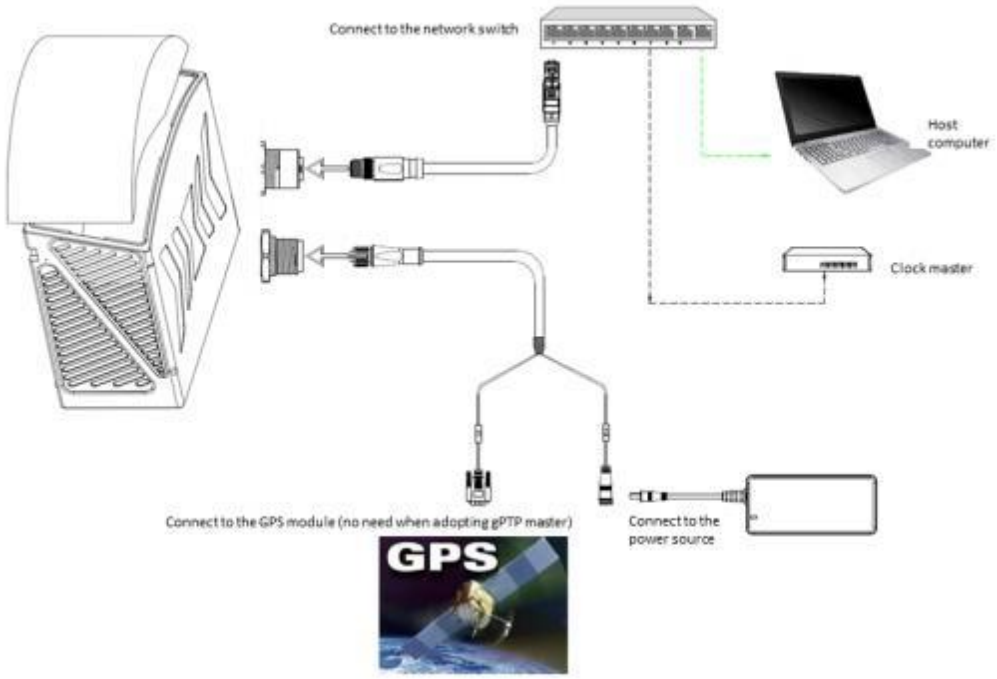

Figure 6.1 Connect the Lidar and gPTP Master

The settings steps on the point cloud display software are as follows: run the software, click on "SetShow" to bring up the parameter modification window, change "Source Selection" to "PTP" as shown in the figure below.

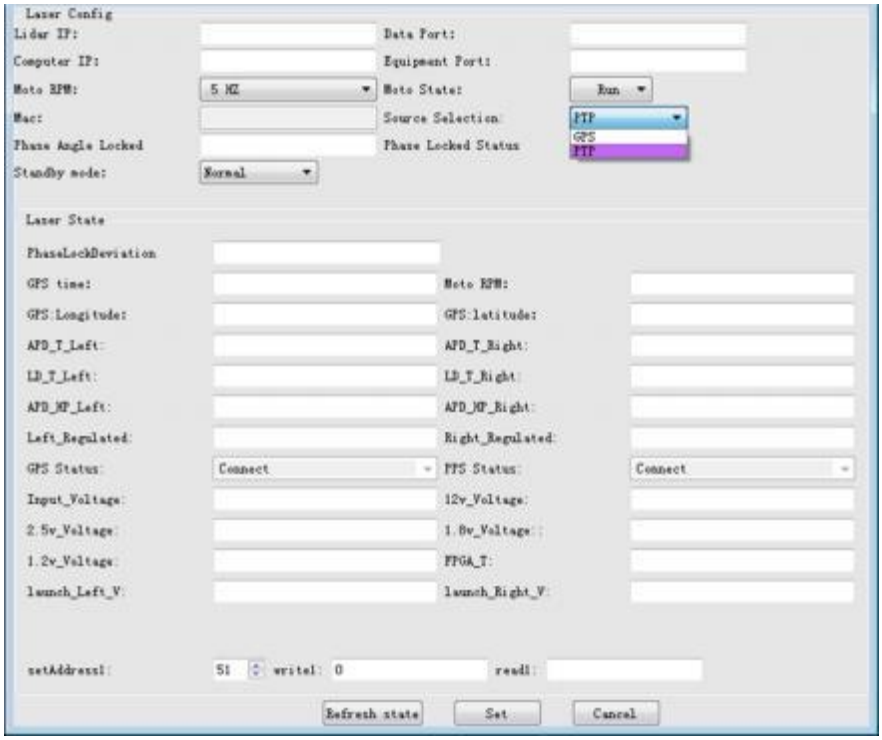

Figure 6.2 Clock Source Selection

Note:

The Timestamp and Date & Time in the point cloud packets will be synchronized strictly according to the time signal provided by the gPTP

master clock.

If "PTP" has been selected as the time source and no gPTP master clock is currently available, the lidar will start timing from the internal default start time (00:00:00 on 1 January); if agPTP time source is provided and then interrupted, the lidar will continue timing from the time of the interruption.

6.2 Lidar Internal Timing

When there is no other equipment to synchronize, the lidaruses 1 second ($1*10^9$ ns) as the cycle. With the nanosecond as the timing unit, the timing value is output as the time stamp of the data packet. At this time, there is no UTC time reference.

When there is no other external clock source after-power on, the lidar will start internal timing from 00:00:00.

When the lidar disconnected from the external clock source after time synchronization, then the lidar will continue timing from the time of the interruption.

7. Angle and Coordinate Calculation

7.1 Vertical Angle

Take **single echo mode** as an example: The vertical angle is obtained from the data packet, whose effective data area contains a total of 1197 bytes, including 171 points, that is, 171*7=1197 bytes. Take the first measure point as an example:

Byte 1	Byte 2	Byte 3	Byte 4	Byte 5	Byte 6	Byte 7
Line_num	Horizontal angle[15:8]	Horizontal angle[7:0]	Distance[23:16]	Distance[15:8]	Distance[7:0]	strength

Byte 1 represents the line number, it is 0x00 by default and the corresponding vertical angle is 0°.

7.2 Horizontal Angle

Byte 2 and **Byte 3** represent the horizontal angle, whose data are stored in Big- Endian mode. The unit is 0.01 degrees. For example, 0x11AD=4525, that is 45.25°.

7.3 Distance Value and Intensity

Byte 4, **Byte 5**, and **Byte 6** represent the first echo distance value. Their data are stored in Big-Endian mode. The two high bytes are the integer part, whose unit is “cm”; and the last byte is the decimal part, whose unit is 1/256 cm. To analyze the distance value, for example: the distance value in the obtained data packet is represented by the hexadecimal number 0x02,0x18,0x32, and the first two bytes are composed of 16-bit unsigned data, that is: 0x0218, which is converted to decimal distance value: 536 cm. The last byte is the decimal part, 0x32 equals 50 in decimal, that is, 50*1/256 cm=0.1953125 cm. Then the two parts add up to 536. 1953125 cm.

Byte 7 represents the first echo strength, and the value range is 0-255. (Echo strength can reflect the energy reflection characteristics of the measured object in the actual measurement environment. Therefore, the echo strength can be used to distinguish objects with different reflection characteristics.)

Note: There are 4 more bytes of distance value and intensity information in dual echo mode than in single echo mode. (for more information, see 5.1.2 subframe)

Byte 8, Byte 9 and Byte 10 represent the secondary echo distance value. Their data are stored in Big-Endian mode. The two high bytes are the integer part, whose unit is "cm"; and the last byte is the decimal part, whose unit is 1/256 cm. The distance value analysis method is the same as the first echo.

Byte 11 represents the second echo strength, and the value range is 0-255. (Echo strength can reflect the energy reflection characteristics of the measured object in the actual measurement environment. Therefore, the echo strength can be used to distinguish objects with different reflection characteristics.)

7.4 Cartesian Coordinate Representation

In order to obtain the vertical angle, horizontal angle and distance parameters of the lidar, the angle and distance information in polar coordinates can be converted to the x, y, z coordinates in the right-hand Cartesian coordinate system. The conversion relationship is shown in the following formula:

$$\begin{cases} x = r\cos\alpha\cos\theta; \\ y = r\cos\alpha\sin\theta; \\ z = r\sin\alpha \end{cases}$$

In the above formula, r is the distance, α is the vertical angle, θ is the horizontal rotation angle (the horizontal correction angle needs to be considered when calculating). And x, y, and z are the coordinates of the polar coordinates projected onto the x,y, and z axes.

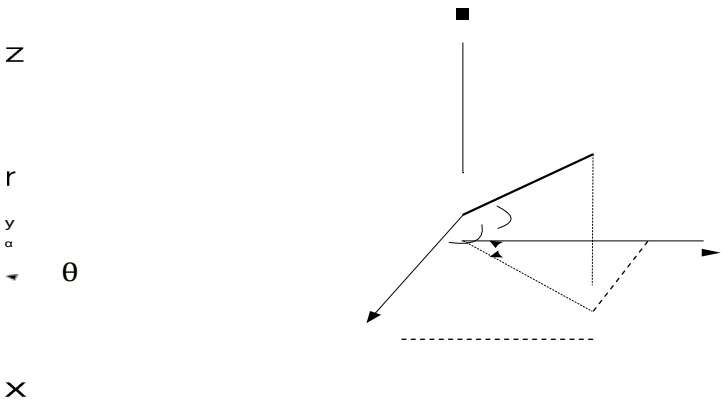

Figure 7.1 Coordinate Mapping

8. Accurate Time Calculation

To accurately calculate the time of the point cloud data, it is necessary to obtain the timestamp of the data packet and the UTC time of the device package output by the lidar. The timestamp and UTC time come from the same time synchronization source.

The laser emission interval of the CLAIRLDR-L1 lidar is about 0.434 μs (TBD), and the measurement interval of adjacent points is 0.434 μs (TBD).

8.1 Single Echo Mode

In the single echo mode, a data packet has a total of 171 measurement data. The packaging time of the data packet is about 0.434 μs*171~=74 .214 μs, and the data rate is about 1s/74 .214 μs ~=13474 data packets/second.

8.1.1 Calculation of Data Packet End Time

The timestamp in the data packet is a relative time in nanoseconds, which is defined as the packing time of the laser measurement data of the last channel in the data packet (packet end time), and its duration is less than 1 second. Therefore, to calculate the absolute end time of the data packet, it is necessary to obtain the 6-byte year, month, day, hour, minute and second information and the 4-byte nanosecond timestamp from the data packet first, and then combine the two to get the exact time when the data packet ends.

8.1.2 Accurate Time Calculation of Channel Data

The precise measurement time of each data can be calculated with the exact time of the end of the data packet and the light-emitting time interval of the 171 data.

Each data packet block of the CLAIRLDR-L1 lidar contains 171 measurement data. Therefore, the end time interval of each data packet is the time of the last point. Assuming that the absolute time of the data packet end is T_{Packet_end}, and the end time of the previous packet is $T_{Packet_end_last}$, then the end time interval of each data packet—$T_{Interval}$ =

(T_{Packet_end} - $T_{Packet_end_last}$) / 171;

The steps for calculating the end time of each data block $T_{Point_end(N)}$ are as follows:

$T_{Point_end(N)}$ = (T_{Packet_end} - $T_{Interval}$*(171-N)). (N = 1, 2, ..., 171), where $T_{Point_end(N)}$ indicates the end time of the Nth data point.

8.2 Dual Echo Mode

In the dual echo mode, a data packet has a total of 109 measurement data. The packaging time of the data packet is about 0.434 μs*109~=47.306 μs, and the data rate is about 1s/47.306 μs ~=21138 data packets/second.

8.2.1 Calculation of Data Packet End Time

The timestamp in the data packet is a relative time in nanoseconds, which is defined as the packing time of the laser measurement data of the last channel in the data packet (packet end time), and its duration is less than 1 second. Therefore, to calculate the absolute end time of the data packet, it is necessary to obtain the 6-byte year, month, day, hour, minute and second information and the 4-byte nanosecond timestamp from the data packet first, and then combine the two to get the exact time when the data packet ends.

8.2.2 Accurate Time Calculation of Channel Data

The precise measurement time of each data can be calculated with the exact time of the end of the data packet and the light-emitting time interval of the 109 data.

Each data packet block of the CLAIRLDR-L1 lidar contains 109 measurement data. Therefore, the end time interval of each data packet is the time of the last point. Assuming that the absolute time of the data packet end is T_{Packet_end}, and the end time of the previous packet is $T_{Packet_end_last}$, then the end time interval of each data packet—**$T_{Interval}$ = (T_{Packet_end} - $T_{Packet_end_last}$) / 109**;

The steps for calculating the end time of each data block $T_{Point_end(N)}$areas follows:

$T_{Point_end(N)} = (T_{Packet_end} - T_{Interval}*(109-N))$. $(N = 1, 2, ..., 109)$, where $T_{Point_end(N)}$ indicates the end time of the Nth data point.

Appendix A. Maintenance

Shipping Requirements

This series of lidars is packed with the packaging materials specially customized by our company, which can resist certain vibrations and impacts. For long-distance transportation, special packaging materials must be used to avoid irreversible damage during transportation.

Installation

Use screws that meet the specifications to fix the lidar base, and make sure the base has good heat dissipation. Wear powder-free clean gloves during installation to avoid optical cover contamination and mechanical damage.

Storage Conditions

It is recommended to store the products in a ventilated and dry place where the temperature is 23 ±5 ℃, and the relative humidity is 30% ~ 70%. Do not store in environments where humidity, pH, etc. exceed the protection level.

Dirt Treatment

If the mask is dirty during use, such as with fingerprints, muddy water, dry leaves

or insect corpses, etc., the lidar's ranging effect will be directly affected. Please clean it according to the following steps:

Tools: PVC gloves, clean cloth, absolute ethanol (99%) Environment: ventilated and dry, away from fire

(1) Put on PVC gloves and fix the lidar base with your fingers; if it is not stubborn stains, use a dust-free cloth or dry air to gently remove the stains;

(2) For stubborn stains, evenly spray the ethanol in the spray bottle on the location to be cleaned and wait for the stain to be dissolved. Then use a dustless cloth dipped in ethanol solvent, and gently wipe the mask. If the cloth is contaminated, please replace it in time. After cleaning the stain, use a new dustless cloth to remove any remaining liquid.

Appendix B. Troubleshooting

For any of the following problems during the use of the lidar, please refer to the corresponding solutions for troubleshooting. If you are unable to implement the following steps, or if you are still unable to solve the problem after implementing the steps, please contact our technical support.

Problem	Solution
The indicator light on the interface box is not working	Confirm: ● power supply meets electrical requirements ● interface box is in good condition with no damage ● power cord contact is good and undamaged; power adapter is working properly ● re-power the lidar to see if the fault disappears
Motor is not running	Confirm: ● power supply meets electrical requirements ● good contact between interface box and the lidar ● re-power the lidar to see if the fault disappears
Motor running but no data output on the host PC or Wireshark	Confirm: ● power supply meets electrical requirements ● the network cable is well connected ● the IP address of the computer matches the destination IP address of the lidar ● your computer's firewall and other security software that may affect Ethernet broadcasts is turned off ● if the lidaremits laser beam with an IR camera or IR card ● re-power the lidar to see if the fault disappears

Wireshark has data but the host PC has no data	Confirm: ● your computer's firewall is turned off ● the IP address of the computer matches the destination IP address of the lidar ● data port and device port in the host computer are set correctly ● lidar port is not occupied by another process ● WinPcap plugin is installed ● re-power the lidar to see if the fault disappears
Point cloud missing	Confirm: ● lidar housing is clean and free of stains ● horizontal FOV setting in the host computer ● the number of packets received by the lidaris normal ● whether the lidaremits laser beams, this can be checked with an IR camera or an IR card ● whether there are network conflicts ● whether there is a network blockage caused by other devices transmitting large amounts of data ● connect the PC to the lidar only and observe if the point cloud is missing ● re-power the lidar to see if the fault disappears
Abnormal point cloud image on the host PC (flickering point cloud;	Confirm: ● the lidar housing is clean and free of stains ● lidar surroundings are not complex

irregular point cloud alignment)	● horizontal FOV setting in the host computer ● whether the network is blocked by other devices transmitting data

Error occurs when running the Windows Client, no interface display	Confirm: ● the graphics card is used correctly; discrete graphics card is recommended. ● the graphics card meets the minimum configuration requirements. ● the driver for the graphics card is correctly installed
Crash or no response of the Windows Client when modifying lidar parameters	Confirm: ● WinPcap plugin is installed. ● the device package port number is correctly filled in. ● the computer memory is not full