ClairLDR L1

Single-line Hybrid Solid-state LiDAR



Overview

The ClairLDR-L1, a single-line hybrid solid-state LiDAR, is designed to offer high scanning speed, resolution, and reliability. With these advantages, it is well-suited for large-scale operations. The ClairLDR-L1 effectively fulfills the demands of 2D modeling detection and obstacle avoidance in industrial settings. Moreover, it provides precise distance and reflectivity information, boasting a detection range of up to 150 m (@10%).

The ClairLDR-L1 serves as the primary sensor in a LiDAR Vehicle Contour Detection System, a fully automated, non-contact equipment designed for independent detection of vehicle length, width, and height. Addressing the issue of oversized vehicles, such as trucks and vans, traversing various roadways (including highways, national roads, and provincial roads), this system swiftly transmits real-time data on vehicle dimensions, including length, width, height, and whether they exceed regulated limits, to highway bureaus, traffic bureaus, and other monitoring platforms. Notably, the detection accuracy of this system surpasses that of other current non-contact detection technologies, such as microwave and video, while demonstrating robust anti-interference capabilities to operate reliably around the clock.

Application Scenarios

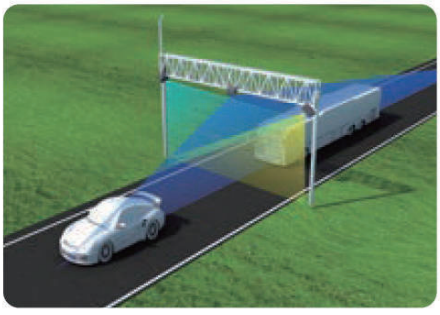

Single-Gantry Single-Lane
Length, Width, and Height Detection

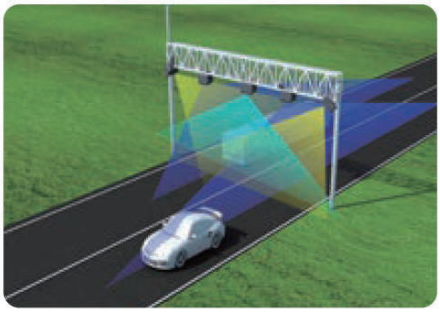

Single-Gantry Multi-Lane
Length, Width, and Height Detection

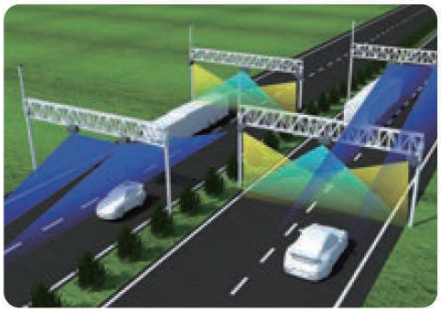

Double-Gantry Multi-Lane
Length, Width, and Height Detection

Specification

Model		ClairLDR-L1				
Laser	**Wavelength**	905 nm				
	Laser Class	Class 1 (eye-safe)				
Spec	**Channels**	1				
	Detection Method	ToF (Time of Flight)				
	Detection Range	150 m (@10% reflectivity)				
	Range Accuracy	±3 cm				
	Horizontal FOV	120°				
	Scanning Frequency	30 Hz	60 Hz	90 Hz	120 Hz	150 Hz
	Horizontal Angular Resolution	0.024°	0.048°	0.072°	0.096°	0.12°
Point Cloud Output	**Data Point Generating Rate (Single Echo Mode)**	150,000 pts/sec				
	Communication Interface	Gigabyte Industrial Ethernet (1000 Base-T)				
	Time Source	gPTP				
Environmental Characteristics	**Operating Voltage**	9 V ~32 VDC				
	Operating Temperature	-40°C to +85°C				
	Storage Temperature	-40°C to +105°C				
	Shock Test	500 m/sec², lasting for 11 ms				
	Vibration Test	5 Hz ~2000 Hz, 3G rms				
	IP Grade	IP 6K9K				
Mechanical Characteristics	**Dimensions**	110*100.4*45 mm				
	Weight	635 g				

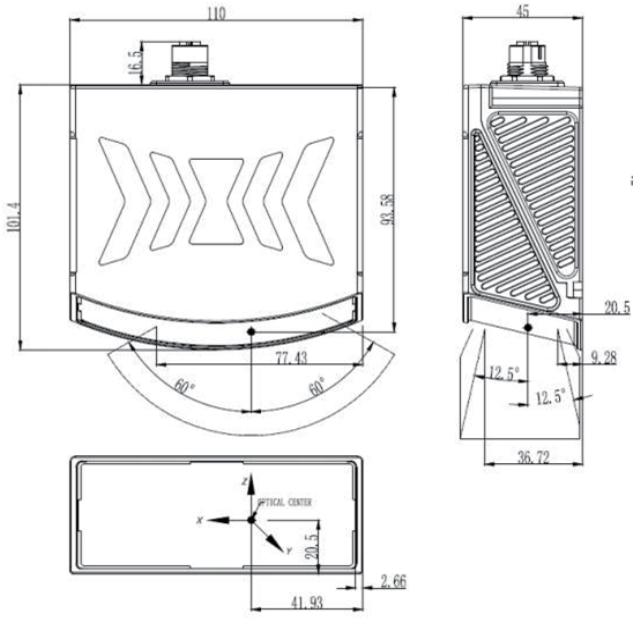

LiDAR Dimension

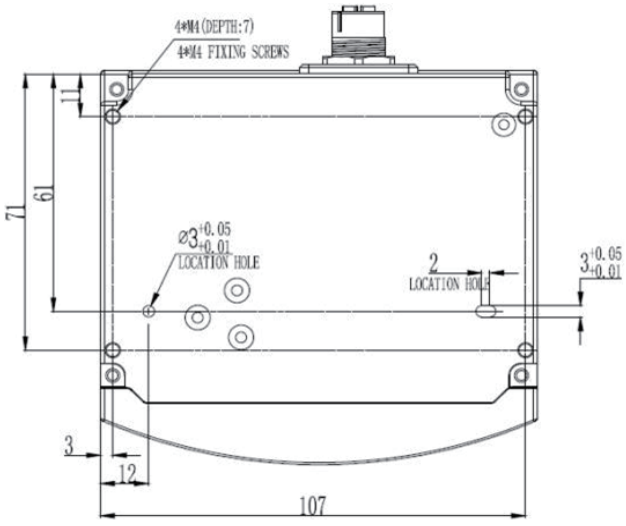

Mounting Dimension

Ordering Information

ClairLDR-L1 Single-line hybrid solid-state LiDAR with a detection range of up to 150m (@10%).